ectronics World's renowned news section starts on page 4

ELECTRONICS WORLD

MARCH 2004 £3.25

Hybrid audio amplifier

The Diode: the first electronic device

Talanted USB interface

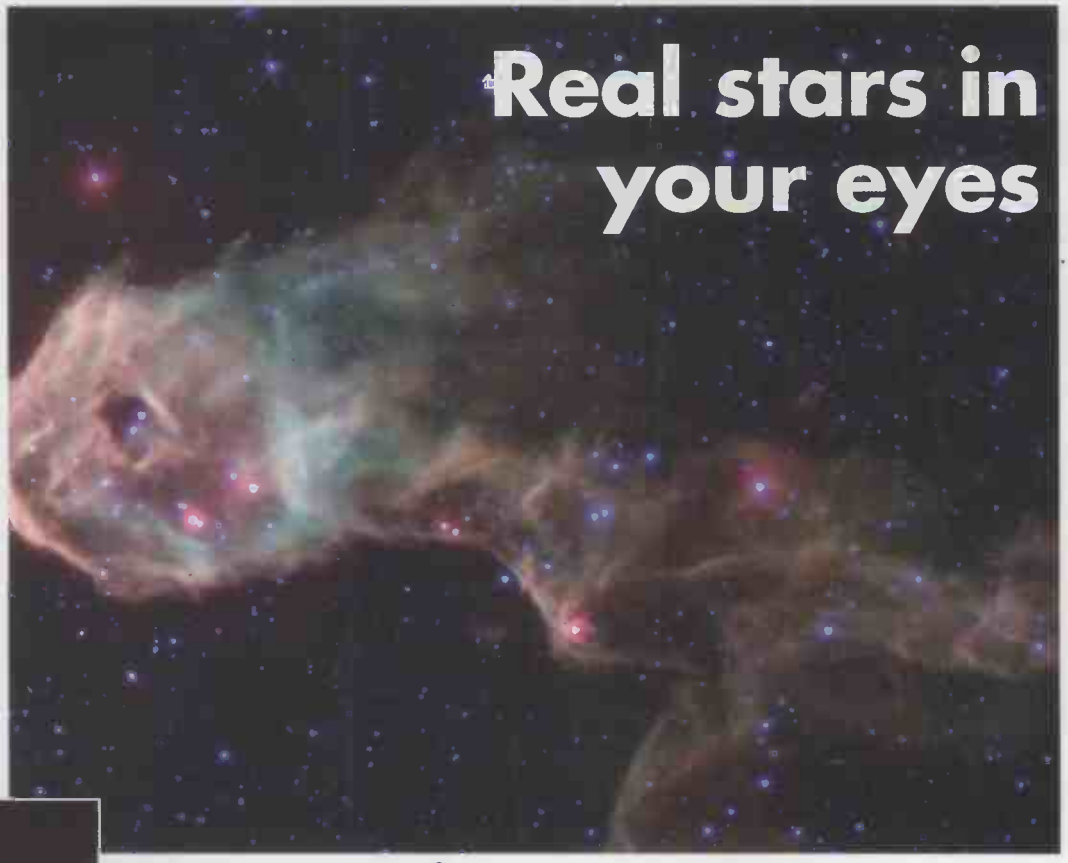

Capacitance meter

Circuit ideas:

- Programmable temperature controller
- Novel multivibrator
- Zener Diode emulators

Telnet

Quality second-user test & measurement equipment

TELNET

Audio Precision – system 1 – Dual Channel Audio Test System	**£2200**
ENI 550L Amplifier (1.5 to 400MHz) 50 Watts	**£2500**
Hewlett Packard 3314A Function Generator 20MHz	**£750**
Hewlett Packard 3324A synth. function/sweep gen. (21MHz)	**£1950**
Hewlett Packard 3325B Synthesised Function Generator	**£2500**
Hewlett Packard 3326A Two-Channel Synthesiser	**£2500**
H.P. 4191A R/F Imp. Analyser (1GHz)	**£3995**
H.P. 4192A L.F. Imp. Analyser (13MHz)	**£4000**
Hewlett Packard 4193A Vector Impedance Meter (4-110MHz)	**£2900**
Hewlett Packard 4278A 1kHz/1MHz Capacitance Meter	**£3500**
H.P. 53310A Mod. Domain Analyser (opt 1/31)	**£3950**
Hewlett Packard 8349B (2 - 20 GHz) Microwave Amplifier	**£2000**
Hewlett Packard 8508A (with 85081B plug-in) Vector Voltmeter	**£2500**
Hewlett Packard 8904A Multifunction Synthesiser (opt 2+4)	**£1750**
Hewlett Packard 89440A Vector Signal Analyser (1.8GHz) opts AY8, AYA, AYB, AY7, IC2	**£9950**
H.P. ESG-D3000A 3GHz Signal Gen	**£6995**
Marconi 6310 – Prog'ble Sweep gen. (2 to 20GHz) – new	**£2500**
Marconi 6311 Prog'ble sig. gen. (10MHz to 20GHz)	**£2995**
Marconi 6313 Prog'ble sig. gen. (10MHz to 26.5GHz)	**£3750**
R&S SMG (0.1-1GHz) Sig. Generator (opts B1+2)	**£2500**
Rhode & Schwarz UPA3 Audio Analyser	**£1500**
Rhode & Schwarz UPA3 Audio Analyser	**£2250**
Fluke 5700A Multifunction Calibrator	**£12500**
Fluke 5800A Oscilloscope Calibrator	**£9995**

OSCILLOSCOPES

Gould 4068 150MHz 4 channel DSO	£1250
Gould 4074 100MHz - 400 Ms/s - 4 channel	£1100
Hewlett Packard 54502A - 400MHz – 400 MS/s 2 channel	£1600
Hewlett Packard 54520A 500MHz 2ch	£2750
Hewlett Packard 54600A - 100MHz – 2 channel	£675
Hewlett Packard 54810A 'Infinium' 500MHz 2ch	£2995
Intron 2020 - 20MHz. Dual channel D.S.O (new)	£450
Iwatstu SS 5710/SS 5702 -	from £125
Kikusui COS 5100 - 100MHz - Dual channel	£350
Lecroy 9314L 300MHz - 4 channels	£2750
Meguro MSO 1270A - 20MHz - D.S.O. (new)	£450
Philips 3295A - 400MHz - Dual channel	£1400
Philips PM3392 - 200MHz - 200Ms/s - 4 channel	£1750
Philips PM3094 - 200MHz - 4 channel	£1500
Tektronix 2213/2215 - 60MHz - Dual channel	£300
Tektronix 2220 - 60MHz - Dual channel D.S.O	£850
Tektronix 2221 - 60MHz - Dual channel D.S.O	£850
Tektronix 2235 - 100MHz - Dual channel	£500
Tektronix 2245A - 100MHz - 4 channel	£700
Tektronix 2430/2430A - Digital storage - 150MHz	from £1250
Tektronix 2445 - 150MHZ - 4 channel +DMM	£850
Tektronix 2445/2445B - 150MHz - 4 channel	£800
Tektronix 2465/2465A /2465B - 300MHz/350MHz 4 channel	from £1250
Tektronix 7104 - 1GHz Real Time – with 7A29 x2, 7B10 and 7B15	from £1950
Tektronix TDS 310 50MHz DSO - 2 channel	£750
Tektronix TDS 420 150 MHz 4 channel	£950
Tektronix TDS 520 - 500MHz Digital Oscilloscope	£2500

SPECTRUM ANALYSERS

Advantest 4131 (10kHz – 3.5GHz)	£3000
Advantest/TAKEDA RIKEN - 4132 - 100KHz - 1000MHz	£1350
Ando AC 8211 - 1.7GHz	£1500
Avcom PSA-65A - 2 to 1000MHz	£750
Farnell SSA-1000A 9KHz-1GHz Spec. An.	£1250
Hewlett Packard 182T Mainframe + 8559A Spec.An. (0.01 to 21GHz)	£2000
Hewlett Packard 853A Mainframe + 8559A Spec.An. (0.01 to 21GHz)	£2500
Hewlett Packard 3582A (0.02Hz - 25.5kHz) dual channel	£1500
Hewlett Packard 3585A 40 MHz Spec Analyser	£3000
Hewlett Packard 3585B 20 Hz - 40 MHz	£4500
Hewlett Packard 3561A Dynamic Signal Analyser	£3500
Hewlett Packard 8568A -100kHz - 1.5GHz Spectrum Analyser	£3500
Hewlett Packard 8590A (opt 01, 021, 040) 1MHz–1.5MHz	£2500
Hewlett Packard 8592B 9 KHz - 22 GHz	£7995
Hewlett Packard 8594 9 KHz - 2.9 GHz	£4500
Hewlett Packard 8596E (opt 41, 101, 105,130) 9KHz - 12.8GHz	£9950
Hewlett Packard 8713C (opt 1 E1) Network An. 3 GHz	£6000
Hewlett Packard 8713B 300kHz - 3GHz Network Analyser	£5000
Hewlett Packard 8752A - Network Analyser (1.3GHz)	£4995
Hewlett Packard 8753A (3000KHz - 3GHz) Network An.	£3250
Hewlett Packard 8753B+85046A Network An + S Param (3GHz)	£6500
Hewlett Packard 8754A - Network Analyser 4MHz -1300MHz)	£1500
Hewlett Packard 8756A/8757A Scaler Network Analyser	from £900
Hewlett Packard 8757C Scalar Network Analyser	£3500
Hewlett Packard 70001A/70900A/70906A/70902A/70205A - 26.5 GHz Spectrum Analyser	£7000
IFR A7550 - 10KHz-GHz - Portable	£1750
Meguro - MSA 4901 - 30MHz - Spec Anaylser	£600
Tektronix 492P (opt1,2,3) 50KHz - 21GHz	£3500
Wiltron 6409 - 10-2000MHz R/F Analyser	£1250
Tek 496 (9KHz-1.8GHz)	£2500

Radio Communications Test Sets

Hewlett Packard 8920B (opts 1,4,7,11,12)	£6750
Hewlett Packard 8922M + 83220E	£2000
Marconi 2955	£1250
Marconi 2955B/60B	£3500
Marconi 2955R	£1995
Motorola R2600B	£2500
Racal 6103 (opts1, 2)	£5000
Rohde & Schwarz SMFP2	£1500
Rohde & Schwarz CMD 57 (opts B1, 34, 6, 19, 42, 43, 61)	£4995
Rohde & Schwarz CMT 90 (2GHz) DECT	£3995
Rohde & Schwarz CMTA 94 (GSM)	£4500
Schlumberger Stabilock 4015	£3250
Schlumberger Stabilock 4031	£2750
Schlumberger Stabilock 4040	£1300
Wavetek 4103 (GSM 900) Mobile phone tester	£1500

MISCELLANEOUS

Ballantine 1620A 100Amp Transconductance Amplifier	£1250
EIP 545 Microwave Frequency Counter (18GHz)	£1000
EIP 548A and B 26.5GHz Frequency Counter	from £1500
EIP 575 Source Locking Freq.Counter (18GHz)	£1200
EIP 585 Pulse Freq.Counter (18GHz)	£1200
Fluke 6060A and B Signal Gen. 10kHz - 1050MHz	£950
Genrad 1657/1658/1693 LCR meters	from £500
Gigatronics 8541C Power Meter + 80350A Peak Power Sensor	£1250
Gigatronics 8542C Dual Power Meter + 2 sensors 80401A	£1995
Hewlett Packard 339A Distortion measuring set	£600
Hewlett Packard 436A power meter and sensor (various)	from £750
Hewlett Packard 438A power meter - dual channel	£1750
Hewlett Packard 3335A – synthesiser (200Hz-81MHz)	£1750
Hewlett Packard 3457A muli meter 6 1/2 digit	£850
Hewlett Packard 3784A - Digital Transmission Analyser	£2950
Hewlett Packard 37900D - Signalling test set	£2500
Hewlett Packard 34401A Multimeter	£500
Hewlett Packard 4274A LCR Meter	£1750
Hewlett Packard 4275A LCR Meter	£2750
Hewlett Packard 4276A LCZ Meter (100MHz-20KHz)	£1400
Hewlett Packard 5342A Microwave Freq.Counter (18GHz)	£850
Hewlett Packard 5385A - 1 GHz Frequency counter	£495
Hewlett Packard 6060A and B Electronic Load 300W	from £750
Hewlett Packard 6622A - Dual O/P system p.s.u	£950
Hewlett Packard 8350B - Sweep Generator Mainframe	£1500
Hewlett Packard 8642A – high performance R/F synthesiser (0.1-1050MHz)	£2500
Hewlett Packard 8656A - Synthesised signal generator	£750
Hewlett Packard 8656B - Synthesised signal generator	£995
Hewlett Packard 8657A - Synth. signal gen. (0.1-1040MHz)	£1500
Hewlett Packard 8657B - 100MHz Sig Gen - 2060 MHz	£3950
Hewlett Packard 8657D - XX DQPSK Sig Gen	£3950
Hewlett Packard 8901B - Modulation Analyser	£1750
Hewlett Packard 8903A, B and E - Distortion Analyser	from £1000
Hewlett Packard 11729B/C Carrier Noise Test Set	from £2500
Hewlett Packard 53131A Universal Frequency counter (3GHz)	£850
Hewlett Packard 85024A High Frequency Probe	£1000
Hewlett Packard 6032A Power Supply (0-60V)-(0-50A)	£2000
Hewlett Packard 5351B Microwave Freq. Counter (26.5GHz)	£2750
Hewlett Packard 5352B Microwave Freq. Counter (40GHz)	£5250
Keithley 220 Programmable Current Source	£1750
Keithley 228A Prog'ble Voltage/Current Source IEEE.	£1950
Keithley 237 High Voltage - Source Measure Unit	£3950
Keithley 238 High Current - Source Measure Unit	£3750
Keithley 486/487 Picoammeter (+volt.source)	£1350/£1850
Keithley 617 Electrometer/source	£1950
Keithley 8006 Component Test Fixture	£1750
Marconi 6950/6960/6960A/6970A Power Meters & Sensors	from £400
Philips 5515 - TN - Colour TV pattern generator	£1400
Philips PM 5193 - 50 MHz Function generator	£1350
Phillips PM 6654C System Timer Counter	£750
Rohde & Schwarz FAM (opts 2,6 and 8) Modulation Analyser	£2500
Rohde & Schwarz NRV/NRVD Power meters with sensors	from £1000
Tektronix AM503 - AM503A - AM503B Current Amp's with M/F and probe	from £800
Wayne Kerr 3245 - Precision Inductance Analyser	£1750
Bias unit 3220 and 3225L Cal.Coil available if required.	(P.O.A)
Wayne Kerr 3260A + 3265A Precision Magnetics Analyser with Bias Unit	£5500
W&G PCM-4 PCM Channel measuring set	£3750

All equipment is used – with 30 days guarantee and 90 days in some cases.
Add carriage and VAT to all goods.

1 Stoney Court, Hotchkiss Way, Binley Industrial Estate
Coventry CV3 2RL ENGLAND

Tel: 02476 650 702
Fax: 02476 650 773
Web: www.telnet.uk.com
Email: sales@telnet.uk.com

CONTENTS

MARCH 2004 VOLUME 110 NUMBER 1815

3 COMMENT
Archive project

4 NEWS
- California makes first carbon nanotube-silicon hybrid chip
- Gate dielectric gets thin
- Tree-borne robot takes the air
- Hard disk heaven

- Electroluminescence challenges for big screen TV market
- Intel takes SRAM below one square micron
- Go to Essex for LIN
- Real stars in your eyes
- New soldering method
- PC spots the movie star in two seconds.
- Koreans push for multimedia over DAB
- Broadband gets to three million

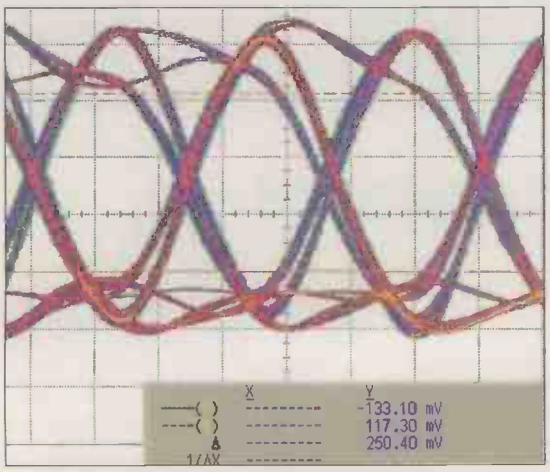

10 VINCERO – A MULTI TALENTED USB INTERFACE
Andrew Malcolm leads us from hardware design to device drivers and host application software

14 IMPROVING SHORT-WAVE DRM RECEPTION WITH A VERTICAL AERIAL
Almost obsessed with DRM, Roger Thomas reviews a vertical aerial in his quest for better reception

20 CIRCUIT IDEAS
- Random LED flasher
- Novel multivibrator
- Floating transducer buffer
- Programmable temp controller
- PC ohm meter
- Zener models for SPICE
- Piezo actuator driver
- CML laser driver
- Battery discharger

29 NEW PRODUCTS
The month's top new products

38 CAPACITANCE METER
Measuring capacitance is not as easy as reaching for the Avo. David Ponting has a practical solution

45 THE DIODE: THE FIRST ELECTRONIC DEVICE
Discovered by accident, Gregg Grant looks at the very beginning of electronics

48 HYBRID AUDIO AMPLIFIER
Jeff Macaulay reckons he's got the best of both worlds in this novel hybrid amp

52 LETTERS
- Airborne lasers
- CE marking
- Devalued degrees
- Digital TV
- Filters
- Ellis responds
- Network analysis

60 WEB DIRECTIONS
Useful web addresses for electronics engineers

PROTEUS

The Complete Electronics Design System

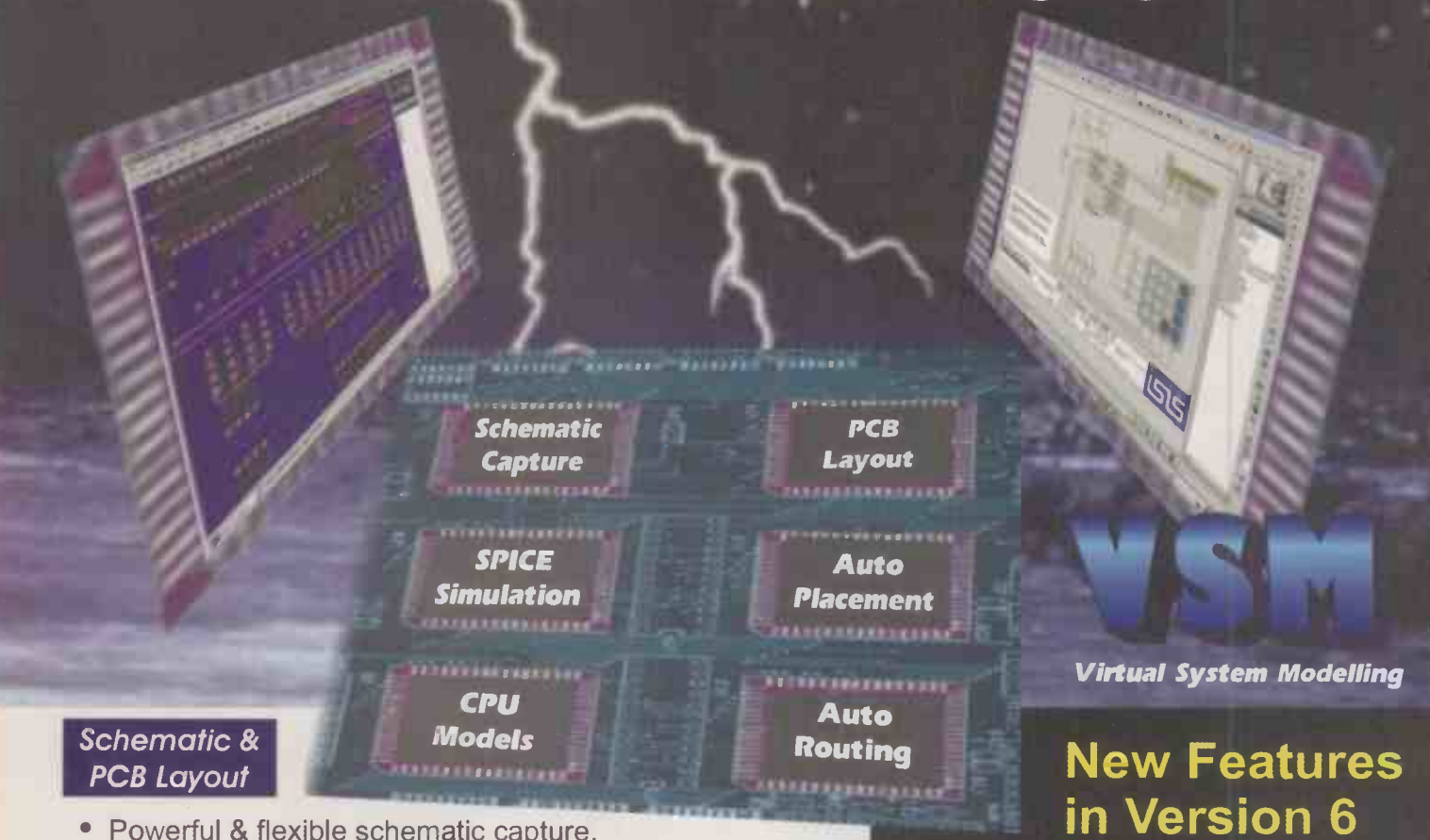

Schematic & PCB Layout

- Powerful & flexible schematic capture.
- Auto-component placement and rip-up/retry PCB routing.
- Polygonal gridless ground planes.
- Libraries of over 8000 schematic and 1000 PCB parts.
- Bill of materials, DRC reports and much more.

Mixed Mode SPICE Circuit Simulation

- Berkeley SPICE3F5 simulator with custom extensions for true mixed mode and interactive simulation.
- 6 virtual instruments and 14 graph based analysis types.
- 6000 models including TTL, CMOS and PLD digital parts.
- Fully compatible with manufacturers' SPICE models.

New Features in Version 6

- Drag and drop toolbars.
- Visual PCB packaging tool.
- Improved route editing.
- Point and click DRC report.
- Multiple design rules (per net).
- Multiple undo/redo.

Call Now for Upgrade Pricing

Proteus VSM - Co-simulation and debugging for popular Micro-controllers

- Supports PIC, AVR, 8051, HC11 and ARM micro-controllers.
- Co-simulate target firmware with your hardware design.
- Includes interactive peripheral models for LED and LCD displays, switches, keypads, virtual terminal and much, much more.
- Provides source level debugging for popular compilers and assemblers from Crownhill, IAR, Keil, and others.

Works with **PIC Basic Plus** from Crownhill Associates

Labcenter Electronics
53-55 Main Street, Grassington. BD23 5AA

Tel: 01756 753440
Fax: 01756 752857
Contact us for
Free Demo CD

www.labcenter.co.uk
info@labcenter.co.uk

EDITOR
Phil Reed
p.reed@highburybiz.com

CONSULTANT
Ian Hickman

CONTRIBUTING EDITOR
Martin Eccles

EDITORIAL E-MAILS
EWeditor@highburybiz.com

EDITORIAL ADMINISTRATION
Caroline Fisher
01322 611274
EWadmin@highburybiz.com

GROUP SALES
Scott Carey
01322 611292

ADVERTISEMENT E-MAILS
s.carey@highburybiz.com
CLASSIFIED FAX
01322 616376

PUBLISHING DIRECTOR
Tony Greville

ISSN 0959-8332
SUBSCRIPTION QUERIES
Tel (0) 1353 654431
Fax (0) 1353 654400

Disclaimer
We work hard to ensure that the information presented in *Electronics World* is accurate. However, *Electronics World's* publisher – Highbury Business Communications – will not take responsibility for any injury or loss of earnings that may result from applying information presented in the magazine. It is your responsibility to familiarise yourself with the laws relating to dealing with your customers and suppliers, and with safety practices relating to working with electrical/electronic circuitry – particularly as regards electric shock, fire hazards and explosions.

Archive project

Eagle-eyed readers will have noticed last month's reader offer of our new archive CD-ROMs. Whilst using one the other day to answer a reader's query about an article four years ago I got to thinking how much better presented the data from the magazine is when it has been 'electrified'. To be able to search on a specific word or just read each issue page by page was quite stunning. This particular reader had a query about a design and wondered whether there had been any follow up letters or corrections. Within a minute I had located the main article, and the follow-up correspondence. A minute later and I had extracted the actual page he needed as a PDF file and emailed to him.

What's the point of this – another plug for the CDs? No! I got to thinking how wonderful it would be to gradually archive all *EWs* and *WWs* back to the very early days in this way. Unfortunately, it's not just a question of scanning the pages – the archive CDs are made from our electronic pages that make up each magazine. The further you go back in time, the worse it becomes.

But it also occurred to me that many readers have huge archives of magazines and also computers and scanners. So, how difficult would it be to mobilise a workforce of readers and spread the project between them? Well, here I am asking the question. Do any of you fancy helping in this project? You would need a stock of magazines, a reasonable computer, a scanner and a CD writer (or an internet connection). Please let me know what you think and whether you'd be willing to help by contacting Caroline (details on this page) with the issues you could scan. If you are emailing please use 'archive' as the subject.

Pete, a reader from Southampton, UK, has pointed out an example of political correctness gone mad.

Los Angeles officials have asked that computer gear manufacturers stop using the terms 'master' and 'slave' on equipment, saying that such terms are offensive.

The request came after a worker spotted a VTR carrying devices labelled as above and filed a discrimination complaint. Since the officials in LA cannot actually think of an alternative, I thought I'd ask you, the readers for alternatives.

Good ones will be sent to the IEEE for approval, as I'm sure they are trying to work out what to do. It might be time to leave the planet!

Phil Reed

Electronics World is published monthly. Orders, payments and general correspondence to **Caroline Fisher, Highbury Business Communications, Nexus House, Azalea Drive, Swanley, Kent, BR8 8HU**

Newstrade: Distributed by COMAG, Tavistock Road, West Drayton, Middlesex, UB7 7QE Tel 01895 444055.

Subscriptions: Wyvern Subscription Services, Link House, 8 Bartholomew's Walk, Ely Cambridge, CB7 4ZD. Telephone 01353 654431. Please notify change of address.

Subscription rates
1 year UK £38.95 O/S £64.50
US$100.62 Euro 102.55

USA mailing agents: Mercury Airfreight International Ltd Inc, 10(b) Englehard Ave, Avenel NJ 07001. Periodicals Postage Paid at Rahway NJ Postmaster. Send address changes to above.
Printed by Polestar (Colchester) Ltd,
Filmsetting by Impress Repro
A1 Parkway, Southgate Way, Orton Southgate, Peterborough, PE2 6YN

HIGHBURY
Business Communications
A DIVISION OF HIGHBURY HOUSE COMMUNICATIONS PLC

California makes first carbon nanotube-silicon hybrid chip

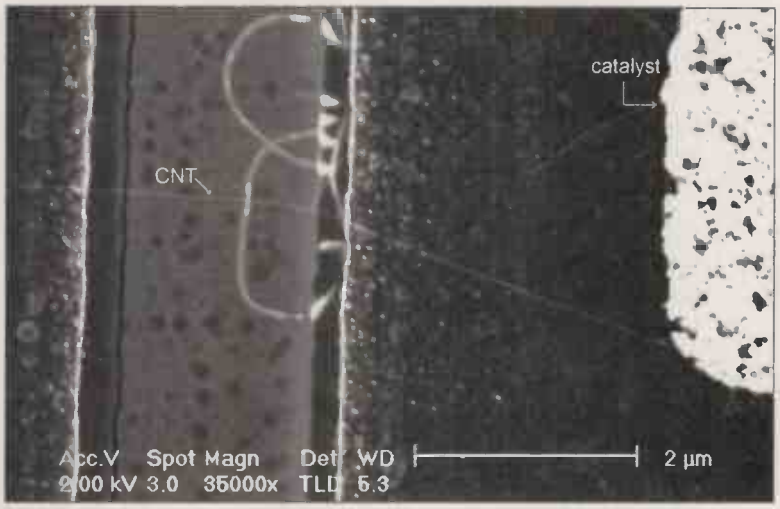

Magnified view of carbon nanotube grown on silicon MOS circuitry. The bright area on the upper right-hand side is the catalyst island upon which the nanotube was grown.

US researchers have create an integrated silicon circuit including carbon nanotubes.

"Until our work, no group has publicly reported success in directly integrating nanotubes onto silicon circuits," said Jeffrey Bokor, Berkeley professor of electrical engineering and computer sciences and principal investigator of the project. "It is a critical first step in building the most advanced nanoelectronic products, in which we would want to put carbon nanotubes on top of a powerful silicon integrated circuit so that they can interface with an underlying information processing system."

Berkeley engineers teamed up with chemists at Stanford University to develop the chip - which is designed to speed up the analysis of synthesised carbon nanotubes - in order to refine nanotube production techniques.

"These results represent a dream come true," said Hongjie Dai, associate professor of chemistry at Stanford. "This achievement opens up a vast number of possible applications in nanotechnology."

The MOS-based chip, has been dubbed the random access nanotube test chip, or RANT.

Nanotubes are grown directly from islands containing a catalyst for nanotube synthesis. Radial contact areas surround 270 degrees of the catalyst islands, where Berkeley has found a way to make the nanotube ends land after growth.

The gap between island and landing is 3µ. There are 2,000 on-chip test sites.

Aluminium is useless for electrical contacts. "The extreme heat required to grow nanotubes would typically melt the circuitry of traditional semiconductors," said the team. It got around the problem by interconnecting the silicon transistors with molybdenum which not only withstands high temperatures, but sticks well to carbon and silicon.

"We first envisioned a patterned growth of carbon nanotubes on silicon wafers five years ago, but it wasn't clear at that time whether that approach would work as an integrated nanotube-silicon hybrid circuit," said Dai - who first discovered a way to selectively launch nanotubes. "It was the combined expertise in chemistry, materials science and electrical engineering that made this a reality."

The resulting chip ideally contains 2,000 carbon nanotubes connected on a $1cm^2$ chip. Unfortunately, sometimes none grow at all, Bokor told Electronics World, and sometimes the pads are covered with multiple tubes.

By turning switches on and off, the path to an individual nanotube can be isolated, then it can be analysed.

Bokor cautions that the chip is not a likely candidate for commercial use. For example, molybdenum is not a typical semiconductor industry material. But what has been learned building it could be used in future chips.

For example, Bokor said, the conductivity of nanotubes is strongly effected by what is on their surface. Technology exists to coat individual nanotubes with receptor molecules, so one chip could, in theory, detect 2,000 different chemicals making an electronic nose.

Gate dielectric gets thin

Belgian research centre IMEC claims to have solved one of the main challenges facing the semiconductor industry – finding a gate dielectric that limits leakage in transistors.

Researchers at IMEC used hafnium dioxide to create the gate dielectrics with the required high-k values. Combined with metal (titanium nitride) gates, rather than polysilicon, the material has the same effect as a silicon dioxide layer less than one nanometre.

However, by using HfO_2 IMEC has cut the leakage current through the gate by three orders of magnitude, compared to SiO_2.

All of the world's chip firms are involved in gate dielectric research, and most believe that a compound of hafnium will solve the problem of current leakage.

Other firms are looking at materials such as hafnium silicate and hafnium silicon oxynitride.

Today's 0.13µ and 90nm process technologies use gate insulation between 1nm and 2nm thick. The new materials are expected to be used at the next process node of 65nm, when SiO_2 would need to be less than 1nm thick.

Tree-borne robot takes the air

Engineers at the University of California, Los Angeles, are developing a low-energy antonymous monitoring system, and have deployed it among the trees of a forest in Washington State.
At the centre of the system is a robot which runs along a wire rope and can lower sensors between the trees below.

Mechanically the system is simple, with solar cells at one end of the cable providing the robot with power through concertina-like flex.

The clever part is a sampling technique, which minimises energy use while providing sufficient resolution to accurately map the two-dimensional slice of forest within the robot's grasp.

What the researchers wanted to avoid was stepping the robot along its wire, measuring parameters all the way from the ground to the cable at each step and thereby using maximum power.

Instead the university noted than not all areas have interesting data at any one moment and finally chose 'nested stratified random sampling'. "This adaptive method bases sampling density on the variance of measured variables," said researchers. That is, it randomly takes samples, but takes more samples where parameters change most rapidly. The random element means it will occasionally measure places without much change, and has a good look around if something has happened.

This patch of ancient forest, at the Wind River Canopy Crane Research Facility in Washington state, is among the most measured in the world. The central tower crane allows researchers into the canopy without disturbing the trees. Just visible at the foot of the photo are the solar cells of UCLA's autonomous monitoring system.

Inset: Engineers, suspended from the project's tower crane, attach the robots power cable during commissioning.

Currently, the robot feeds temperature, humidity and light intensity back to the forest project.

The robot is part of Los Angeles' Networked Infomechanical Systems (NIMS) programme. "This is a broad new research thrust directed to fundamental advances in the ability to monitor and ultimately control environments through distributed sensing," said the university.

While cable-mounted robots are a significant part of this, providing two dimensional coverage for not much more than the cost of a fixed sensor, the programme is also investigating the use of networks of fixed and moving sensors as a means of sensing a large volume of space cheaply.

Not only can sensors pass information between themselves. "The NIMS infrastructure allows nodes to acquire and transport physical samples," said the university. So mobile robots may pass samples of material from one to another – to a central collecting point or analyser.

While the forest environmental science project is the first application for NIMS, the university sees it also providing monitoring for public health applications.

Hard disk heaven

An incredibly small hard disk drive, just 0.85 inches across, has been developed by Toshiba's storage division.

The same diameter as a £1 coin, the hard drive will go into production with densities of 2Gbyte and 4Gbyte, the firm said.

Toshiba was one of the first firms to move into small form factor hard disks, and has for some years produced 1.8inch devices with up to 40Gbyte of capacity.

While the 1.8inch version is used in type II PC Cards, the firm expects the 0.85inch devices to integrate directly into consumer products, such as mobile phones or digital camcorders. It could also be used as a removable storage device.

Sampling of the drives is due in the summer, with full production later this year at volumes above 200,000 units a month.

Electroluminescence challenges for big screen TV market

The 1280x768 pixel (HDTV)

iFire Technology has scaled its 17 inch AC electroluminescent full-colour display to a 34 inch prototype.

The 1280x768 pixel (HDTV) result, claims the company: "is the largest flat panel ever produced using inorganic electroluminescent technology".

The firm's original plan called only for a monochrome display by now, but inspiration from white LED technology caused iFire's chief technology officer to shift from separate red, green and blue electro-phosphors to a single blue electro-phosphor with colour-change phosphors on top for green and red pixels – called Color-by-Blue by iFire.

"Within four or five months, Color-by-Blue had surpassed older [RGB electro-phosphor] patterning technique in efficiency," said company technologist Dan Carkner. "The results were so clear."

Quantum efficiency for the bought-in colour change phosphors, which iFire deposits with its own thick-film process, is 60 per cent.

As the eye is more sensitive to red than blue, and even more sensitive to green, this gives a visible brightness gain of 1:4 for green pixels and 1:2.5 for red.

Using a single light-producing phosphor has also dodged a problem which dogs organic LED and plasma display technologies: differential aging leading to colour shift. "It completely obviates differential aging between phosphors," said Carkner. The displays last 20,000 hours to half brightness from 300cd/m^2, he claims.

Response speed is suitable for video reproduction. "The response is microseconds, dominated by the blue phosphor, with millisecond decay," said Carkner. "Quite similar to a TV display."

iFire expects a production line to be running, at its Japanese development partners, in a couple of years. "2006 for a production line," said Carkner.

The initial 34 inch display is being kept away from outsiders, but iFire plans to show an enhanced prototype at the Seattle Society for Information Display conference in May.

Intel takes SRAM below one square micron

Intel has squeezed the six transistors needed in a standard SRAM cell into an area of just 0.57μ^2.

The chipmaker managed this by using a 0.065μ, or 65nanometre, process.

The actual lengths of the transistors' gates are just 35nm.

The development was part of the testing of this process, which is scheduled for production in 2005.

Intel said it has made a 4Mbit SRAM using the process.

The firm also managed to pattern the critical features of the device using 193nm light – three times the size of the smallest features.

In fact today's 193nm lithography will be used all the way to 45nm, said the firm.

"Our roadmap is such that 193nm is the primary choice for 65nm and 45nm," said Mark Bohr, director of process architecture and integration at Intel.

Patterning at this scale requires the use of phase shift masks and optical proximity correction, which Bohr said, "allows us to achieve sub-40nm lines from 193nm light".

The next feature size of the roadmap, not due until perhaps 2010, will be 32nm, which will need soft X-rays to pattern the silicon.

Go to Essex for LIN

A UK firm has designed an intellectual property core for the LIN (Local Interconnect Network) bus that runs on low cost programmable logic.

The core from Essex design house Intelliga Integrated Design will fit into half of a CoolRunner CPLD from Xilinx, said the firm. This combination gives a simple comms protocol is available on a very low power, yet programmable, device.

The LIN bus is mainly used in automotive applications for the non-critical systems, such as electric mirrors, seat adjustment, doors, sunroofs and air conditioning.

The largest CoolRunner device with 512 macrocells typically uses under 100mA at 1.8V, dropping to μA in standby.

Intelliga's LIN core will also run on Xilinx's Spartan and Virtex field programmable gate arrays. The core would take up three per cent of a million gate Spartan device, said the firms.

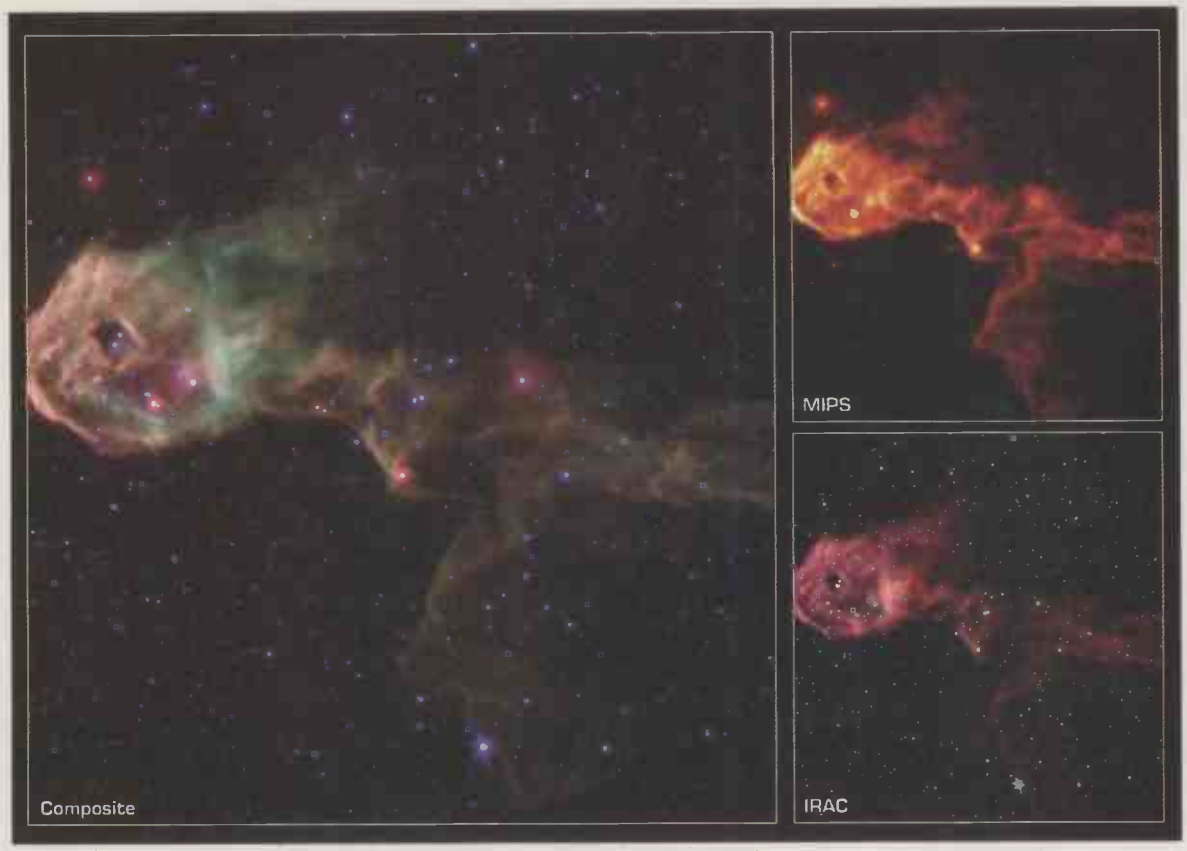

Real stars in your eyes

NASA has released the first images from its infra-red telescope, recently renamed as the Spitzer Space Telescope.

The first pictures show a glowing stellar nursery where new stars are born from intersteller gas.

"Like Hubble, Compton and Chandra, the new Spitzer Space Telescope will soon be making major discoveries, and, as these first images show, should excite the public with views of the cosmos like we've never had before," said Dr Ed Weiler, NASA's associate administrator for space science.

Hubble forms images from visible light, Compton uses gamma rays, while Chandra receives X-rays.

The image is a composite, with red representing light at 24μ, green at 5.8 to 8.0μ and blue at 3.6 to 4.5μ.

It shows the Elephant's Trunk Nebula some 2,500 light years from Earth. Hydrogen tends to show up as green, while hydrocarbons are brown.

The whole Nebula is opaque to visible light, but Spitzer can view the protostars forming inside, shown as pinky-red objects.

The stars have been formed by pressure from ionised gas from a nearby massive star.

New soldering method

Fujitsu has developed technology that forms 35μ pitch solder bumps on integrated circuits for flip-chip mounting – increasing connection density by approximately 50 times compared to conventional flip-chip interconnections.

In order to avoid short-circuiting between solder bumps, currently bump pitches are a minimum of 200μ, and usually much larger.

The new bumps are formed by a plating method.

To narrow bump pitch, it is necessary to refine photo-resist resolution and raise the bump height. However, smaller bump pitch generally means uneven bumps as the plating solution does not reach evenly into etch-resist openings.

Although the firm is not saying how, it claims to have improved its photo-resist material, exposure technique, photo-resist patterns and current control during plating, to get even bumps – with both lead-containing and lead-free solders.

Even so, it has also had to develop a way to mechanically level its bumps after deposition and Fujitsu demands precision-control of temperature and force during flip-chip bonding.

Value Added Technologies of South Korea has adopted Fujitsu's chips and processes for chip-on-chip multi-chip module manufacture – for a dental x-ray image sensor with four CMOS chips and 160,000 solder bumps.

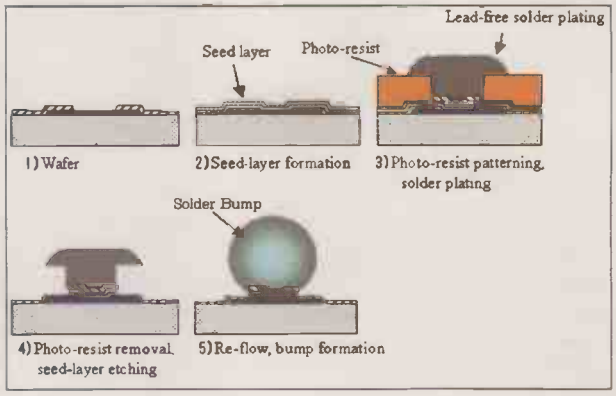

PC spots the movie star in two seconds

Technology from NEC and Samsung has been combined to provide the forthcoming MPEG-7 standard with face recognition capability.

The MPEG (Moving Picture Experts Group) committee is working on MPEG-7 to provide a standard set of tools to describe content for multimedia retrieval. This will eventually allow a picture of a face to be used at a search term for finding certain actor in a movie, for example.

"To date there has been a need to standardise face description to represent facial features as a tool for identifying people," said the firms. "NEC - SAIT [Samsung Advanced Institute of Technology] technology was chosen due to best performance in retrieval accuracy, speed, and data size proposed in the MPEG-7 benchmark tests."

Referred to as MPEG-7 AFR (advanced face recognition descriptor), the technology describes a face in a handful of bytes.

NEC provided 'cascaded linear discriminant analysis', which selects features of human faces "within a cascading architecture" and can describe a face in as few as 253 bits.

SAIT developed 'face component-based face feature representation method', which extracts facial features from each face component - such as the eyes and mouth - and improves the accuracy of NEC's analysis.

"It realises a matching speed capability of one million times per second on a conventional PC thus making it possible to retrieve a scene starring a specific person in approximately one second from a 24 hour video," said the firms.

Koreans push for multimedia over DAB

The Korean Government plans to start multimedia broadcasting using the digital audio broadcasting (DAB) technology, a move that would add video and large amounts of text data to audio broadcasts.

The country is working with firms such as LG Electronics, Samsung and Texas Instruments to develop chipsets for the programme.

However, it is UK-based firms have led the way towards digital multimedia broadcasting (DMB), with Frontier Silicon and Radioscape both demonstrating video over a standard DAB link.

Radioscape has developed, and demonstrated, the equipment for DMB.

"We've got DMB infrastructure," said the firm's Nigel Oakley. "At the moment the specification is being worked on, driven mainly out of Korea and China."

DMB will be able to use both terrestrial and satellite for delivery, the former using the Eureka-147 standard in Band-III or the L-Band. Satellite would use the S-Band at 2.6GHz.

There is the possibility that the UK could transmit DMB, but it would depend on freeing up extra spectrum, perhaps in the L-Band.

The existing multiplexes each have only 200kHz available for text services.

Broadband gets to three million

More than three million broadband connections have been made in the UK, according to Ofcom, the telecoms regulator.

Moreover, adoption rates are still running at record levels, ahead of predictions. More than 40,000 households and businesses connect to broadband each week.

"Broadband is one of the fastest-growing new technologies in recent years. It is transforming the way consumers and businesses use the Internet, and is now becoming an important market in its own right," said David Edmonds from Ofcom.

The regulator said that half of all UK households and two-thirds of businesses now have an Internet connection. Some 20 per cent of the connected homes are using broadband – a figure that has doubled in one year.

Most people are connecting to broadband using ADSL down the standard phone line, beating cable modems by a factor of three to one.

"We have reached the 3 million figure earlier than expected and this is great news for the broadband market. The UK was a slow starter but real progress is now being made," said the Government's e-commerce minister Stephen Timms.

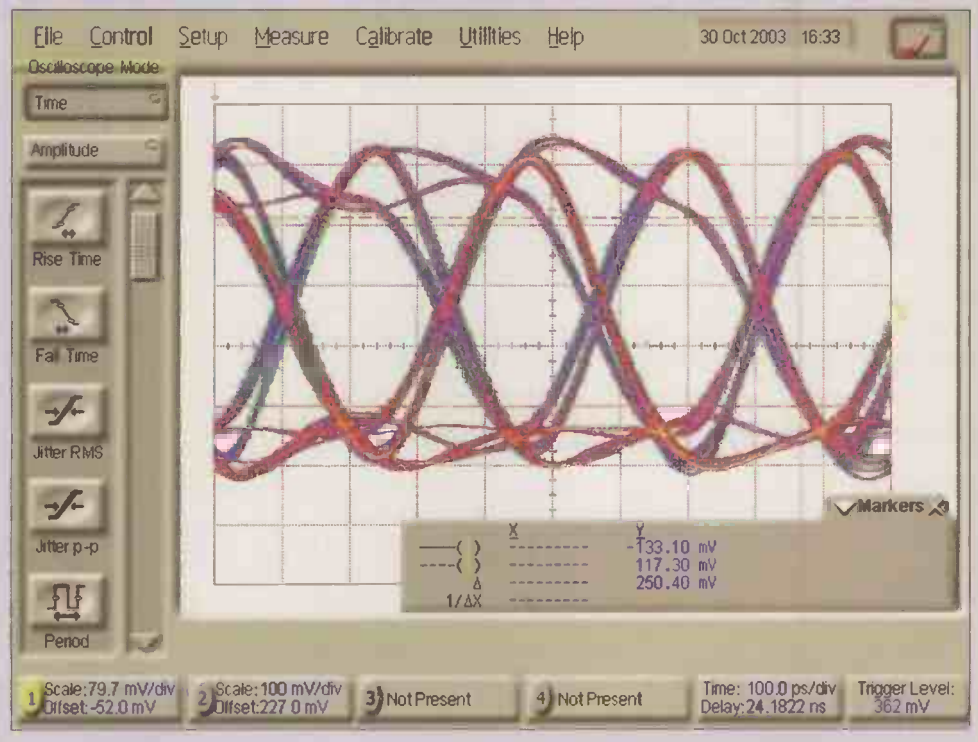

Programmable logic firm Lattice Semiconductor has begun shipping a chip that includes hard-wired circuitry for 4.25Gbit/s serial communications.
The ORT82G5 field programmable gate array includes four serial channels, the associated serialiser/deserialiser blocks and 10,000 programmable four input look-up-tables.
The image shows the eye diagram from a device transmitting at 4.25Gbit/s through three inches of FR4 PCB and 24 inches of coax.

OLSON®

UK's NO.1 IEC CONNECTION

CALL OUR SALES HOTLINE

020 8905 7273

VISA MasterCard SWITCH

24 HOUR DELIVERY SERVICE

QMS ISO 9002 REGISTERED FIRM GB 1907

OLSON ELECTRONICS LIMITED
OLSON HOUSE, 490 HONEYPOT LANE, STANMORE, MIDDX HA7 1JX
TEL: 020 8905 7273 FAX: 020 8952 1232
e-mail: sales@olson.co.uk web site: http://www.olson.co.uk

Vincero – a multi talented USB interface

This series of articles describes a simple USB device, known as Vincero, (from the Italian for 'I win'). The article leads the reader from hardware design through device firmware to device drivers and host application software.

Some time ago I was asked to design an interface between a standard analog telephone and a PC. The interface had not only to ring the telephone's bell and record the button presses as they occurred but also to connect the full-duplex audio to and from the phone. The device had to work in a portable environment with a laptop computer, and so PCI or ISA interfaces were obviously a non-starter.

The resulting design exercise taught me a great deal about the workings of USB, both from a hardware and software point of view. It also showed me that, given the right tools and with the correct selection of parts, creating a USB interface for a device need not be the daunting task I had once thought. USB is well supported by today's popular operating systems, and certain facilities, such as audio channels, are supported by build-in drivers.

In these cases, once the USB device has correctly identified itself to the system (during the initial phase of USB communications known as 'enumeration') the appropriate drivers are automatically loaded. The programmer has only to write the firmware for the USB device to produce a functional audio interface.

As I said in the introduction, this series of articles will describe a simple USB device. The article leads the reader from hardware design through device firmware to device drivers and host application software.

I provide full constructional details for a general purpose I/O module capable of expansion to drive a wide range of equipment from simple digital I/O, through A/D and D/A converters and on to disk drives and flash cards.

It should be possible to construct the module for less than £20, and all the required software is available for free download from the internet.

Why USB?

Here are some of the facilities provided by USB which make it popular amongst manufacturers and users alike.

Supplies power

The USB interface has four wires. Two wires carry the differential USB signals, the other two a nominal 5 volt supply and return. Each USB device can sink up to 500mA As a result, many USB devices can be self powered. For devices such as mice, this is clearly an essential feature, but is also very useful for other devices such as hubs, memory stick readers, disk drives, barcode readers and RS232 converters. Not having to have a plug-top power supply can make a USB device much more saleable, especially to the laptop-toting community.

Plug and play

A driving force behind the design of USB was ease of installation and use. When a user purchases a new device, he or she should be able to plug it in and start using it straight away with no complex installation procedure beyond possibly inserting a driver disk. Some devices such as USB mice, RS232 interfaces and audio devices are supported directly by the OS, and so even driver installation becomes unnecessary. This ease of use comes at a price to the developer, who must ensure that his device can configure itself, and supply an appropriate driver.

High data rates

The USB 2.0 specification defines a bus speed of 480Mbits/second, or 60Mbytes/second. This is considerably in excess of RS232 and parallel port data rates, and quite adequate to support devices traditionally integrated into PCs, such as disk drives, flash card readers, audio CODECs, LAN interfaces and high performance printers.

Expandable

USB was designed from the outset to be expandable. Although only one downstream device may be connected to an upstream port, expansion hubs are available to allow the connection of many devices to a single host. These hubs may optionally be bus powered or have their own power supply, thus boosting the power available to downstream devices.

Standard cables

The standard cables specified by the USB standard leave no room for doubt. The connectors at each end are different, making it impossible to connect two peer devices together, thus eliminating one source of confusion. The cables are cheap and robust. For connection to small devices such as digital cameras, an alternative small outline plug has been specified.

Low cost

Despite its sophisticated facilities, the cost of adding an entry level USB interface to a device is surprisingly low. Only three chips and a handful of passive devices are required to implement the interface, with a cost in production quantities well below £5.

Figure 1

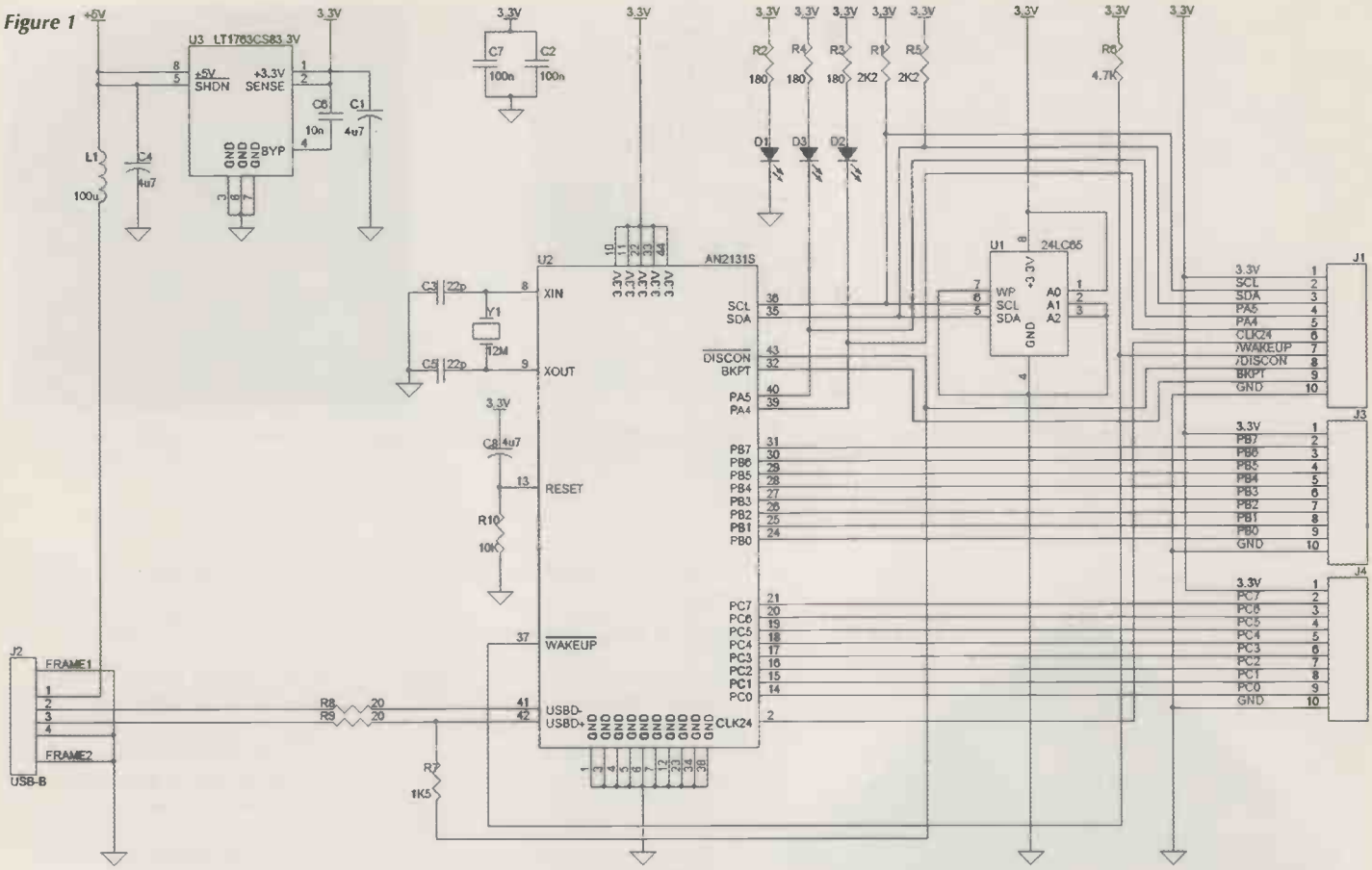

USB – a quick overview

A full explanation of the USB protocol is beyond the scope of this article, and is anyway described well in the USB specification and many other places. The reader is referred to the many excellent documents and publications described in the 'Web links and References' section.

USB is a master/slave serial bus. The host PC is always the master. The master communicates with connected devices by sending packets addressed to them. Physical addresses of connected devices are assigned when the device is initially plugged in, and is transparent to the programmer. The host sends a 'Start of Frame' packet to all devices once per millisecond, and the reception of this packet may be used by slave devices as a timebase.

The USB specification mandates a set of packet exchanges between the host and a slave to aid configuration. This phase of communication, completed soon after the slave device is recognised by the host allows the host to load the appropriate drivers for the device. Once this phase is complete, the user's applications may send data to and receive data from the slave device. Transfers vary from single-byte payloads to

Parts list

C1 4.7µF	1812 surface mount package	L1 100µH	1210 surface mount package
C2 0.1µF	0805 surface mount package	R1 10kΩ	0805 surface mount package
C3 22pF	0805 surface mount package	R2 10kΩ	0805 surface mount package
C4 4.7µF	1812 surface mount package	R3 10kΩ	0805 surface mount package
C5 22pF	0805 surface mount package	R4 10kΩ	0805 surface mount package
C6 0.1µF	0805 surface mount package	R5 10kΩ	0805 surface mount package
C7 0.1µF	0805 surface mount package	R6 10kΩ	0805 surface mount package
C8 4.7µF	1812 surface mount package	R7 20Ω	0805 surface mount package
D1 LED	1406 surface mount package	R8 10kΩ	0805 surface mount package
D2 LED	1406 surface mount package	R9 1.5kΩ	0805 surface mount package
D3 LED	1406 surface mount package	R10 20Ω	0805 surface mount package
J1	Pin Header – through-hole	U1 24LC65	8-pin small outline I.C.
J2	USB type 'B' – through-hole	U2 AN2131S	44 Pin plastic quad flat pack
J3	Pin Header – through-hole	U3 LT1763CS8	8-pin small outline I.C.
J4	Pin Header – through-hole	Y1 12MHz	HC49/4H through hole or s/m

Development tools

To develop applications software for the module, you will need these tools:

- A PC running Windows 98SE/2000/XP, equipped with a USB port.
- A Windows C compiler/development system. I use Microsoft Visual C version 6, but the free GNU compilers (available for download from the internet) should work fine.
- An 8051 compiler. I use a free compiler from the Sourceforge organisation called SSDC.
- The 8051 compiler and libraries for the module are available by emailing **vincero@synchronousdesigns.co.uk** with 'development tools' in the subject line.

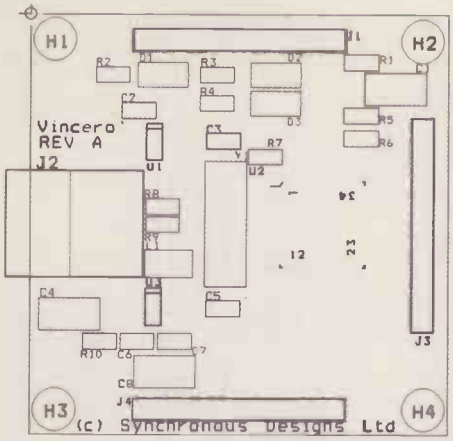

Figure 2 The silk screen applied to the PCB, showing component locations

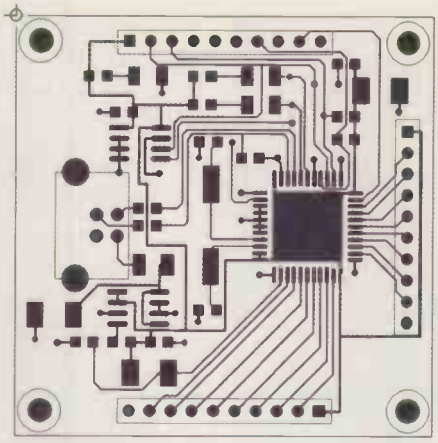

Figure 3 The upper copper layer. Most of the interconnections are on this layer.

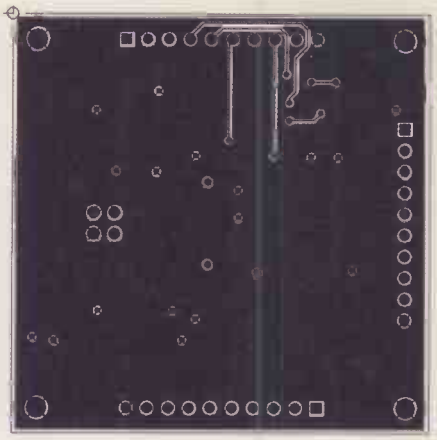

Figure 4 The lower copper layer. Mainly a ground plane, with a few connections.

Figure 5 The completed Vincero module.

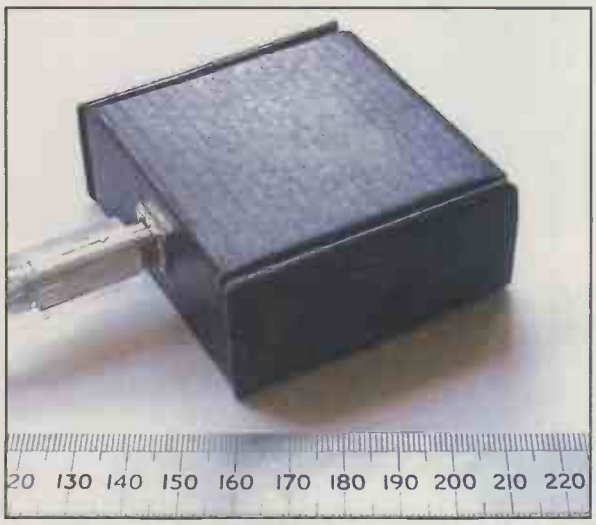

Figure 6 TheVincero module in its sophisticated packaging (a cardboard box!)

streaming data at audio or video data rates.

Module Description

The Vincero module is based around Cypress Semiconductors' AN2131 USB chip. This chip is basically a standard 8051 core with a serial interface engine implementing the USB protocol bolted on the side. The choice of the industry standard 8-bit 8051 core allows users to use familiar tools and libraries and possibly to reuse existing code bases.

I designed the module to be the absolute minimum required to support USB whilst providing the maximum flexibility for expansion at lowest cost. As a result, the module has only three semiconductor parts and a handful of passive components. The USB chip's I/O facilities are all brought out to cheap pin headers on a 0.1 inch pitch, allowing for easy use with popular prototyping systems. Three LEDs provide power indication and a minimum amount of debugging help.

Circuit description

Figure 1 shows the complete circuit, the heart of which is U2 the AN2131S USB processor. It is an 8051 core with a USB 'serial interface engine' which offloads much of the low-level USB communications from the 8051. U3 is a micropower voltage regulator from Linear Technologies which regulates the 5V USB power supply down to 3.3V for the remaining circuitry. U1 is a 64Kbit serial EEPROM from Mircochip Technology capable of holding firmware for the 8051. Three light emitting diodes D1, D2 and D3 provide power indication and some general purpose programmable indication. Y1 provides the 12MHz internal clock for the processor with C8 and R10 providing power-up reset.

R7 is worthy of special mention. Connected between the DISCON pin of the processor and the positive arm of the differential USB bus, it allows firmware to request 'disconnection' from the bus and thus to force a subsequent 'renumeration' by the host PC of the device. I will cover this more in the article on writing firmware for the device, but suffice it to say that this facility is crucial the device's flexibility.

J2 provides connection to the USB bus via the standard 'type B' USB connector, and J1, J3 and J4 provide an expansion bus into which application specific modules may be plugged. In essence this bus consists of two parallel 8 bit busses (some lines of which have alternate uses, such as serial ports, counter/timer I/O etc.) and a third a bit bus with some more specialised facilities, including an I2C bus, giving access to many devices that implement this interface.

Notes on construction

Many modern semiconductor parts are only available in surface mount formats, and the parts for this module are no exception. Thus the Vincero module was designed from the start to use all surface mount parts except for the connectors. This enabled the module to be made very small (50mm x 50mm) and thus easy to incorporate into a larger system. The three 10-pin connectors are on a standard 0.1 inch pitch and may be mounted either above or below the board giving further flexibility.

All parts are freely available for order from online suppliers such as

RS and Farnell. Gerber files for the PCB are available on request by emailing vincero@ synchronousdesigns.co.uk with 'Gerber files' in the subject line. If there is sufficient interest, I may be able to offer blank or pre-populated PCBs at a competitive price.

With a fine tipped soldering iron, fine gauge solder, tweezers and normal hand tools it is quite possible to construct the module in about half an hour.

Connection to a PC

A standard USB cable is all that is required to connect to module to a PC, as the module derives its power from the USB bus. At this point D1 should light up, and the PC (assuming it is running Windows 98, 2000 or XP) with detect the module's arrival and prompt the user to install some software. The next article will describe in detail the installation process and the steps required to write module firmware and host PC software.

Web links and references

www.cypress.com web site of the manufacturer of the AN2131S. Many datasheets and application notes, as well as sample software is available for download.

www.usb.orgthe web site of the organisation that controls the USB standard. The latest specification, as well as many supporting documents is available.

www.linear.com

www.microchip.com web sites of the manufacturers of the supporting devices used in the design.

www.msdn.com Microsoft's developer website. This huge site has so much information it is often difficult to find what you are looking for. But there is a great deal of documentation, sample code and other information available if you persist. The Windows SDK (software development kit) may be downloaded – if you have a high speed connection.

www.sorceforge.com An invaluable source of 'free' open source software including compilers and other development utilities. The SDCC 8051 compiler and the GNU compilers for Windows may be downloaded from here.

Recommended reading

The USB spec.

The AN2131S datasheet – as well as thoroughly describing the device, it has a good introduction to the **USB protocol.**

USB complete (Second Edition) – Jan Axelson ISBN 096508195-8 Published By Lakeview Research

Comparison between USB and other I/O facilities

Parallel Port

The parallel port has long been a favourite low cost I/O system for engineers wishing to interface all sorts of peripherals to the PC. It does have limitations however, and many elaborate schemes have been invented to provide expansion of this port. From a software perspective, writing to the parallel port is easy under the DOS/Windows95/98 family of operating systems, but becomes more difficult under WindowsNT/2000/XP (and indeed Linux) because these operating systems, in an effort to ensure greater system stability, place much greater restrictions on a user-mode programs' access to hardware ports. The classic use for the parallel port, in fact the reason it was designed into the original PC is the drive printers which implement the 'Centronics' parallel interface. Such printers are readily available today, although I detect a slow drift towards USB for small 'personal' printers, and to direct LAN connection for office type printers. Another use for the parallel port is the 'dongle', a device allowing a software manufacturer to limit the use of his or her product to a single copy, locked to the dongle plugged into the parallel port. This use alone, I suspect, will guarantee the survival of the parallel port for some time to come.

Serial Port

The serial port provides access to many devices equipped with a compatible port, and for many years serial communications was the de facto standard for communications to devices such as modems and certain classes of printer. The serial port implements a 'standard' know as RS232, and herein lies the problem.

The 'standard' is very vague about some aspects of communication and a user can easily get lost in a mire of conflicting baud rates, flow control regimes and differing pinout configurations. I have rarely been able to successfully connect two such devices together without recourse to a 'scope or DVM. RS232 is definitely NOT plug-and- play. Having said all that, one connected and configured, RS232 can provide a robust and reliable link over long distances. Again from a software perspective, support for RS232 varies from OS to OS.

The more modern OS's have a well defined API for communication via RS232, including link setup and flow control. Older systems must rely on third party libraries, or home-grown solutions. The serial port has on occasions been used in ways never originally intended. It is possible to extract small amounts of current from the flow control signals, making it possible for a connected device to be powered from the host computer.

The serial mouse is a classic example of this. It is worth noting that with the advent of USB, serial ports are beginning to disappear from smaller systems, particularly laptops and notebooks. Space on the back panel of such computers is always at a premium and RS232 is perhaps less used that the parallel port. Additionally USB to RS232 adapters are small, cheap and readily available.

Improving short-wave DRM reception with a vertical aerial

My main radio interest is receiving DRM (Digital Radio Mondiale) broadcasts using a RX-320 radio. I have noted that there are times when the signal was not strong enough for the DRM software decoder to provide audio but the software could decode the station information, so I have been looking for a better radio aerial.

Roger Thomas gets tuning

DRM is set to replace AM but currently there are no consumer DRM radios available. The only way for radio enthusiasts to listen to these digital broadcasts is to use an existing radio and feed the IF (at 12kHz) into a soundcard for decoding by software. My previous article in EW (June 2003) showed how the TenTec RX-320 could be easily modified for DRM reception.

With DRM digital signals it is the signal-to-noise-ratio (SNR) that determines how much of the transmission can be decoded. It is for this reason that using a pre-amplifier was excluded as it may well amplify the radio signal but it would also add some noise of its own. If the signal is very strong this can cause the AGC to distort the DRM signal, so a large aerial that could overload the receiver was also rejected.

As an alternative to using the telescopic aerial supplied with the RX-320 receiver I have a long wire and use a matching balun when connecting this aerial to the RX-320. The long wire does show slight signal improvement over the telescopic aerial but clearly the orientation of the wire aerial would offer improvement on some radio broadcasts but not for others. I did not want to install an aerial tuning unit for this aerial as I am writing software to scan short wave and require a broadband omni-directional aerial.

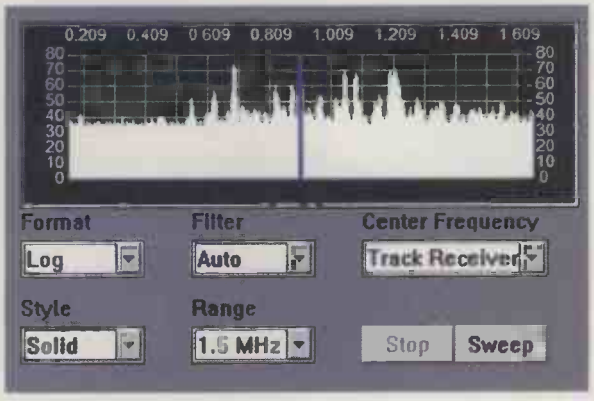

Figure 1: RX-320 bandscan of long and medium wave using the telescopic aerial

Vertical aerial

Having considered several vertical aerials I decided on the Super Scanstick II. This aerial is manufactured by Moonraker Ltd, who are located in Buckinhamshire, UK and advertise in various radio magazines. Looking through the various radio newsgroups on the internet I found a variety of opinions regarding this aerial, ranging from 'it works' to the view that a long wire was a better cheaper alternative. Also someone expressed the view that these are expensive for what they are and that you could make one for a fraction of the price.

After reviewing the newsgroups I e-mailed sales at Moonraker requesting them to post technical information to me but received an e-mail stating that 'We do not have any technical information, sorry'. I was rather surprised with this response as they manufacture the aerial. However I decided to buy one so went on-line to their web site and clicked the 'I'd like to order' button. Later that day I received an e-mail confirming that an order has been placed.

As well as the aerial (cost £39.95) I ordered a PL-259 connector and BNC connector. The total for all these items was £47.70; this includes the £6.00 delivery charge.

Construction

The Scanstick aerial is manufactured using 2.5cm white plastic tubing measuring 1.5 metres long with a metal coupling at the bottom. This metal assembly houses the PL259 connector and the three metal radials, each 30cm long, screw into the side. This aerial is intended to be mounted externally so that once the PL259 co-axial connector and co-axial cable is attached, a 30cm metal tubing is connected to the metal base covering the connector. Included with the Scanstick are two U bolts and plastic coupling for clamping this metal tubing onto a suitable pole. Internally, according to the website, it had eight capacitor loaded coils to give wideband coverage.

I soldered the PL259 plug on to the end of six metres of co-axial cable with the BNC plug at the other end for connection to the RX-320's 50Ω external antenna socket, a phono to BNC adaptor is included with the receiver. Using this connection

automatically disables the signal from the telescopic aerial.

The Scanstick was placed close to the RX-320 so that it was also subjected to a similar level of computer generated radio noise. I figured that if the Scanstick matched or outperformed the RX-320's telescopic aerial under these adverse conditions then further gains would occur when the aerial was mounted outside and further away from any noise.

Comparison

I wanted to directly compare this new aerial with the RX-320's telescopic aerial to see if it performed better. Making such direct comparisons between short wave aerials is notoriously difficult as the propagation conditions are changing all the time. A perceived improvement when changing aerials may be entirely due to more favourable propagation conditions. The ability of the receiver in terms of its signal handling dynamic range and AGC action could also give a misleading result if relying on the received signal strength using the 'S' meter reading.

Fortunately there are two practical ways to make a direct comparison between aerials, without needing signal generators and other test equipment. Namely the bandscan features of the RX-320 when using the Ten-Tec control software, and the DRM software decoder that can save the signal-to-noise-ratio (SNR) of a DRM transmission as a text file to disk.

Despite the claim of 0-2000MHz coverage I found the Scanstick to have poor response on long and medium wave. These bandscans were taken in the evening, centred on 909kHz, and clearly show reduced sensitivity when compared to the telescopic aerial. However, this may be beneficial for short wave reception as this prevents high power medium wave broadcast stations from affecting or overloading the front-end of the RX-320.

DRM transmission

At present the daily DRM short wave test transmissions for Western Europe are concentrated in the 49 metre and 31 metre broadcast bands. Of the regular broadcasts I decided on the DRM broadcast on 15.440MHz from Deutsche Welle (in English) from their Sines, Portugal transmitter.

Prior to the aerial comparison a bandscan of the 13 metre band was done, centred on 15.415MHz, to determine the overall radio conditions. Note that the received signal levels are uniformly reduced on the bandscan when using the Scanstick aerial. This is unlikely to be entirely due to losses in the co-ax as at these frequencies co-axial losses should be negligible.

DRM decoder software

The Fraunhofer software was used to decode the DRM signal and the record reception function selected after 1 minute of receiving the Deutsche Welle signal, using the telescopic aerial. This record function saves the SNR frame average and the number of decoded audio frames for each minute to a text file.

After 10 minutes of using the telescopic aerial the reception record feature was de-selected and the aerial was changed to the Scanstick aerial. A minute was given to allow the RX-320 to adjust to the new signal strength and for the decoder software to re-synchronisation. After this minute had elapsed the reception record function was again selected.

As previously noted propagation conditions are constantly changing so the test was immediately repeated, again allowing a minute between each aerial change over to permit the receiver and decoder software to adjust. Consequently the test sequence was initial 1 minute using the telescopic aerial, then 10 minutes reception using the telescopic aerial (reception record function activated), 1 minute change over, 10 minutes reception using the Scanstick aerial, 1 minute change over, 10 minutes telescopic aerial, 1 minute change over, and finally 10 minutes reception using the new vertical aerial.

The reception file for the 15.440MHz is given **Figure 7**. Each audio transmission frame is 400mS long, and the /10 part in the reception file indicates there are 10 audio frames per transmission frame. As there are 150 transmission frames, this results in 1500 audio frames per minute. The occasional discrepancies where 1510 audio frames is listed is due, I believe, to

Figure 6: Comparison summary for 15.440MHz.

19m – 15.440MHz	telescopic	scanstick
average SNR (dB)	19.55	23.05
average frames decoded %	81.70	99.62

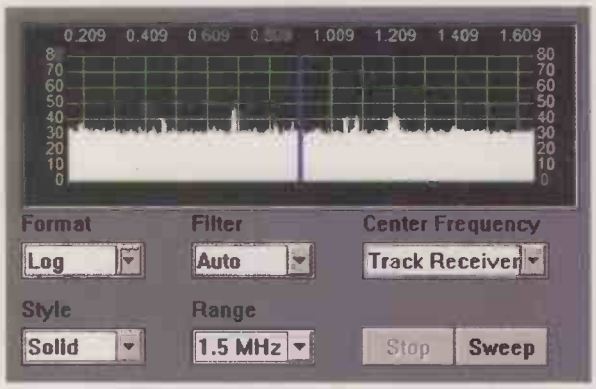

Figure 2: RX-320 bandscan of long and medium wave using the Scanstick aerial

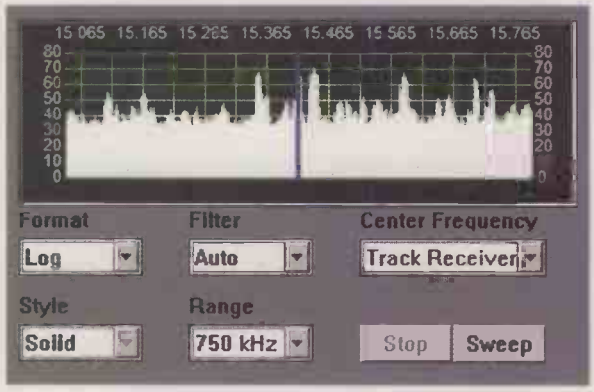

Figure 3: 19 metre bandscan using telescopic aerial

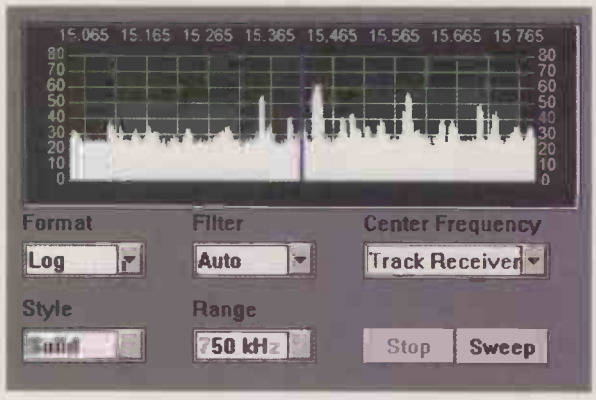

Figure 4: 19 metre bandscan using Scanstick aerial

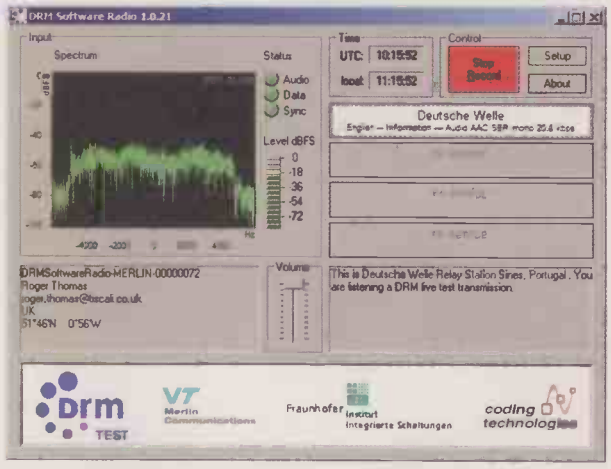

Figure 5: DRM decoder software used to produce the reception data file

Figure 7: Results of 15.440MHz reception

```
>>>>
DRMSoftwareRadio-MERLIN-00000072
Software Version 1.0.21
Starttime (UTC)  2003-05-06 10:15:01
Frequency        15440 kHz
Latitude         51°46'N
Longitude         0°56'W

MINUTE  SNR     SYNC    AUDIO     TYPE
  0000   19      150  1190/10       0
  0001   21      150  1500/10       0
  0002   19      150  1314/10       0
  0003   21      150  1500/10       0
  0004   20      150  1275/10       0
  0005   21      150  1500/10       0
  0006   21      150  1424/10       0
  0007   18      150  1224/10       0
  0008   22      150  1500/10       0
  0009   22      150  1500/10       0

CRC: 0xe8c5
<<<<

>>>>
DRMSoftwareRadio-MERLIN-00000072
Software Version 1.0.21
Starttime (UTC)  2003-05-06 10:26:03
Frequency        15440 kHz
Latitude         51°46'N
Longitude         0°56'W

MINUTE  SNR     SYNC    AUDIO     TYPE
  0000   22      149  1490/10       0
  0001   22      150  1500/10       0
  0002   23      150  1500/10       0
  0003   24      150  1500/10       0
  0004   23      150  1500/10       0
  0005   22      150  1500/10       0
  0006   23      150  1500/10       0
  0007   24      150  1500/10       0
  0008   24      151  1510/10       0
  0009   23      150  1500/10       0
CRC: 0xdd52
<<<<

>>>>
DRMSoftwareRadio-MERLIN-00000072
Software Version 1.0.21
Starttime (UTC)  2003-05-06 10:37:03
Frequency        15440 kHz
Latitude         51°46'N
Longitude         0°56'W

MINUTE  SNR     SYNC    AUDIO     TYPE
  0000   20      150  1499/10       0
  0001   20      150  1170/10       0
  0002   14      150   342/10       0
  0003   20      150  1500/10       0
  0004   18      150   812/10       0
  0005   16      150   932/10       0
  0006   19      150  1050/10       0
  0007   19      150  1500/10       0
  0008   21      150  1500/10       0
  0009   20      150  1468/10       0

CRC: 0x6652
<<<<

>>>>
DRMSoftwareRadio-MERLIN-00000072
Software Version 1.0.21
Starttime (UTC)  2003-05-06 10:48:02
Frequency        15440 kHz
Latitude         51°46'N
Longitude         0°56'W

MINUTE  SNR     SYNC    AUDIO     TYPE
  0000   24      150  1500/10       0
  0001   24      150  1500/10       0
  0002   23      150  1496/10       0
  0003   22      150  1475/10       0
  0004   24      150  1500/10       0
  0005   24      150  1500/10       0
  0006   24      150  1500/10       0
  0007   23      150  1414/10       0
  0008   22      150  1500/10       0
  0009   21      150  1500/10       0

CRC: 0x1653
<<<<
```

internal rounding errors in the software as the minute starts from when the record function is selected rather than the internal clock.

This reception file was converted into a comma-delimited file with the comments and text removed. This allowed only the numeric results to be loaded into an Excel spreadsheet so that the results could be converted to a graph. FAC and type data was ignored. The time was changed to reflect the correct sequence of events, including the one minute change over where no reception results are logged.

The two important results show the

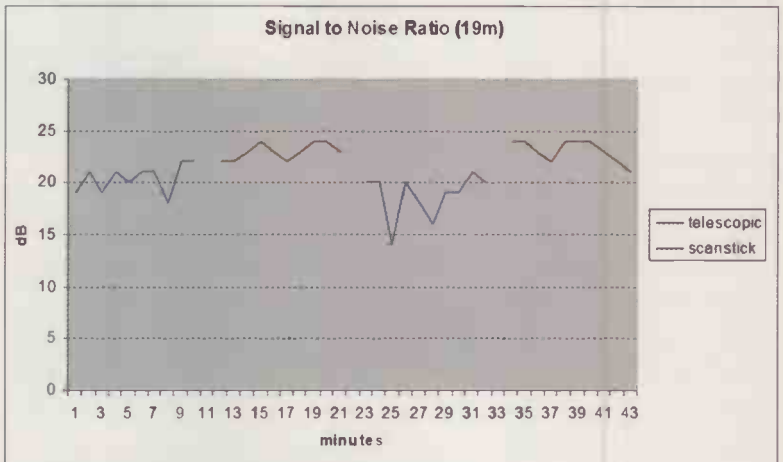

Figure 8: Comparison of SNR (15.440MHz)

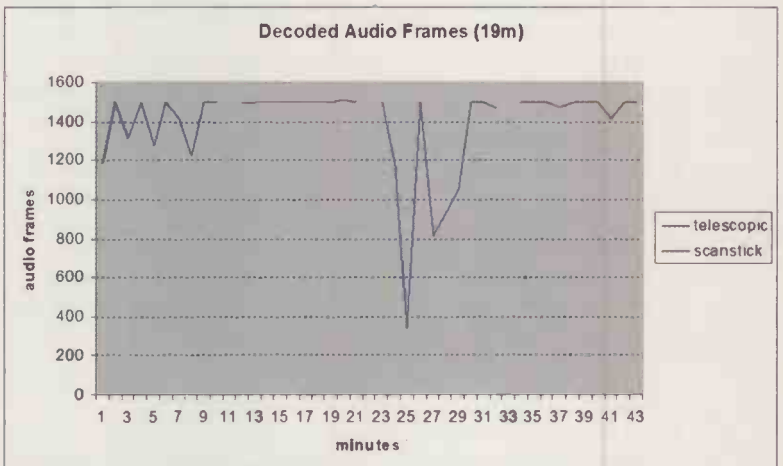

Figure 9: Comparison of number of audio frames decoded (15.440MHz)

Figure 10 comparison summary for 6.075MHz.

49m – 6.075MHz	telescopic	scanstick
average SNR (dB)	15.55	20.45
average frames decoded %	49.95	97.09

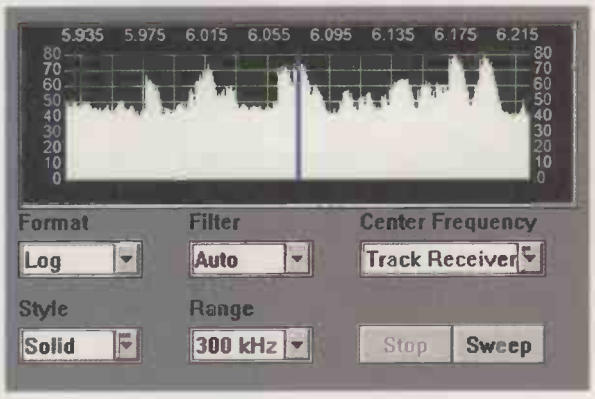

Figure 11: 49 metre bandscan using telescopic aerial

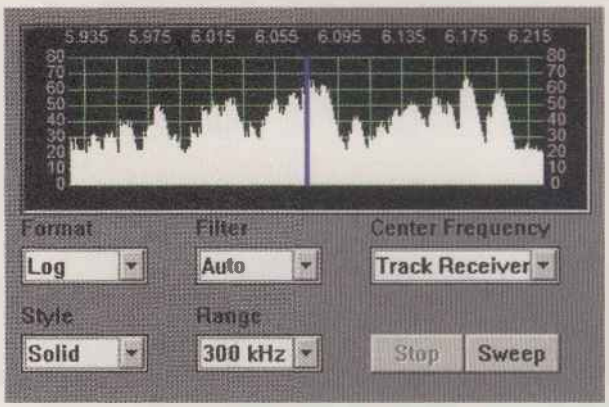

Figure 12: 49 metre bandscan using Scanstick aerial

SNR and the number of audio frames correctly received. As can be seen from the graphs **Figure 8** and **Figure 9** the SNR has improved using the Scanstick despite the reduced signal levels evident in the bandscan. This improvement shows in the increased number of audio frames correctly decoded.

There is a correlation between the signal level and the number of audio frames decided correctly. However it is not obvious from the reception data when the loss of audio frame results in an audio drop-out as the DRM signal is robust and allows for a number of failed audio frames before audio is lost.

49 metre test

I decide to run the comparison test again using DRM test transmission on another frequency. This time the 6.140MHz (49 metre band) Deutsche Welle broadcast from Julich, Germany was used. A bandscan of the 49 metre band was done centred on 6.075MHz and, as before, the

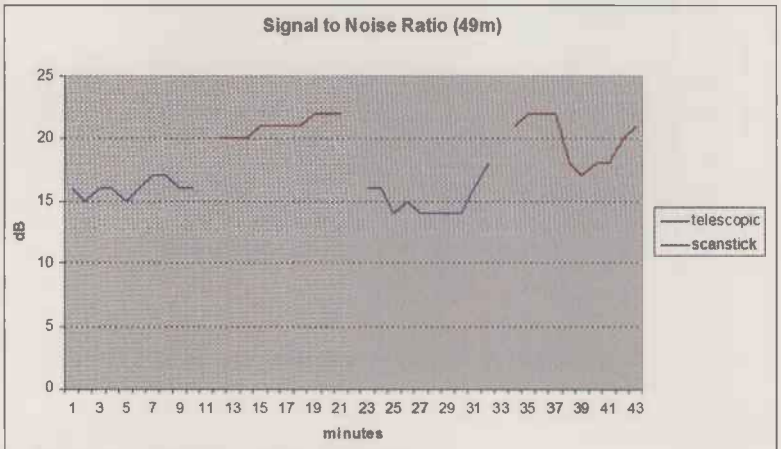

Figure 14: comparison of SNR (6.140MHz)

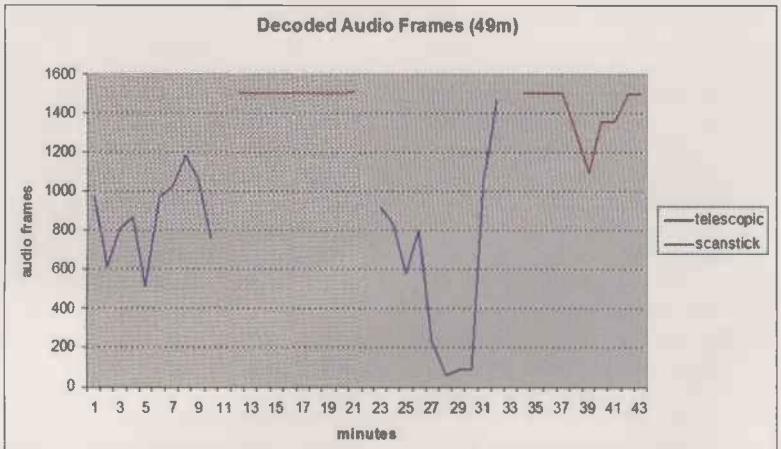

Figure 15: comparison of number of audio frames decoded (6.140MHz)

Figure 13: results of 6.170MHz reception

```
DRMSoftwareRadio-MERLIN-00000072
Software Version 1.0.21
Starttime (UTC)  2003-05-09 18:00:02
Frequency        6140 kHz
Latitude         51°46'N
Longitude         0°56'W

MINUTE  SNR     SYNC    AUDIO     TYPE
  0000   16      149   970/10       0
  0001   15      150   611/10       0
  0002   16      150   809/10       0
  0003   16      150   862/10       0
  0004   15      150   510/10       0
  0005   16      150   970/10       0
  0006   17      150  1021/10       0
  0007   17      150  1181/10       0
  0008   16      150  1063/10       0
  0009   16      151   757/10       0

CRC: 0x89df
<<<<

>>>>
DRMSoftwareRadio-MERLIN-00000072
Software Version 1.0.21
Starttime (UTC)  2003-05-09 18:11:03
Frequency        6140 kHz
Latitude         51°46'N
Longitude         0°56'W

MINUTE  SNR     SYNC    AUDIO     TYPE
  0000   20      150  1500/10       0
  0001   20      150  1500/10       0
  0002   20      150  1500/10       0
  0003   21      150  1500/10       0
  0004   21      150  1500/10       0
  0005   21      150  1500/10       0
  0006   21      150  1500/10       0
  0007   22      150  1500/10       0
  0008   22      150  1500/10       0
  0009   22      151  1510/10       0

CRC: 0x85c0
<<<<

>>>>
DRMSoftwareRadio-MERLIN-00000072
Software Version 1.0.21
Starttime (UTC)  2003-05-09 18:22:02
Frequency        6140 kHz
Latitude         51°46'N
Longitude         0°56'W

MINUTE  SNR     SYNC    AUDIO     TYPE
  0000   16      150   915/10       0
  0001   16      150   838/10       0
  0002   14      150   578/10       0
  0003   15      150   801/10       0
  0004   14      150   236/10       0
  0005   14      150    59/10       0
  0006   14      150    91/10       0
  0007   14      150    93/10       0
  0008   16      150  1050/10       0
  0009   18      150  1462/10       0

CRC: 0x2b80
<<<<

>>>>
DRMSoftwareRadio-MERLIN-00000072
Software Version 1.0.21
Starttime (UTC)  2003-05-09 18:33:01
Frequency        6140 kHz
Latitude         51°46'N
Longitude         0°56'W

MINUTE  SNR     SYNC    AUDIO     TYPE
  0000   21      150  1500/10       0
  0001   22      150  1500/10       0
  0002   22      150  1500/10       0
  0003   22      150  1500/10       0
  0004   18      150  1312/10       0
  0005   17      150  1097/10       0
  0006   18      150  1358/10       0
  0007   18      150  1353/10       0
  0008   20      150  1497/10       0
  0009   21      150  1500/10       0

CRC: 0xe5d0
<<<<
```

Figure 17: results of 7.230MHz reception

```
>>>>
DRMSoftwareRadio-MERLIN-00000072
Software Version 1.0.21
Starttime (UTC)  2003-05-12 13:51:03
Frequency        7320 kHz
Latitude         51°46'N
Longitude         0°56'W

MINUTE  SNR     SYNC    AUDIO     TYPE
  0000   18      150   1500/10      0
  0001   15      150   1437/10      0
  0002   19      150   1500/10      0
  0003   20      150   1500/10      0
  0004   20      150   1500/10      0
  0005   18      150   1500/10      0
  0006   18      150   1499/10      0
  0007   19      150   1427/10      0
  0008   18      150   1352/10      0
  0009   18      150   1269/10      0

CRC: 0xc504
<<<<

>>>>
DRMSoftwareRadio-MERLIN-00000072
Software Version 1.0.21
Starttime (UTC)  2003-05-12 14:02:02
Frequency        7320 kHz
Latitude         51°46'N
Longitude         0°56'W

MINUTE  SNR     SYNC    AUDIO     TYPE
  0000   15      145    638/10      0
  0001   14      146    848/10      0
  0002   15      149    844/10      0
  0003   14      147    799/10      0
  0004   14      147    790/10      0
  0005   12      141    392/10      0
  0006   13      106    170/10      0
  0007   12       57      0/10      0
  0008    9      116    365/10      0
  0009   12      150    581/10      0

CRC: 0xb825
<<<<

>>>>
DRMSoftwareRadio-MERLIN-00000072
Software Version 1.0.21
Starttime (UTC)  2003-05-12 14:13:02
Frequency        7320 kHz
Latitude         51°46'N
Longitude         0°56'W

MINUTE  SNR     SYNC    AUDIO     TYPE
  0000   15      150    387/10      0
  0001   17      150    973/10      0
  0002   18      150   1160/10      0
  0003   18      150   1350/10      0
  0004   18      149   1254/10      0
  0005   18      150   1500/10      0
  0006   19      150   1411/10      0
  0007   18      150   1472/10      0
  0008   16      150   1103/10      0
  0009   18      150   1452/10      0

CRC: 0x7c05
<<<<

>>>>
DRMSoftwareRadio-MERLIN-00000072
Software Version 1.0.21
Starttime (UTC)  2003-05-12 14:24:02
Frequency        7320 kHz
Latitude         51°46'N
Longitude         0°56'W

MINUTE  SNR     SYNC    AUDIO     TYPE
  0000   17      150   1140/10      0
  0001   16      151   1079/10      0
  0002   16      150    966/10      0
  0003   17      150   1497/10      0
  0004   16      150   1286/10      0
  0005   16      150   1172/10      0
  0006   17      150   1500/10      0
  0007   19      150   1500/10      0
  0008   17      150   1227/10      0
  0009   18      150   1292/10      0

CRC: 0xb94c
<<<<
```

Figure 16: Comparison summary for 7.320MHz

41m – 7.230MHz	telescopic	scanstick
average SNR	17.90 dB	14.95 dB
average frames decoded	88.49%	60.29%

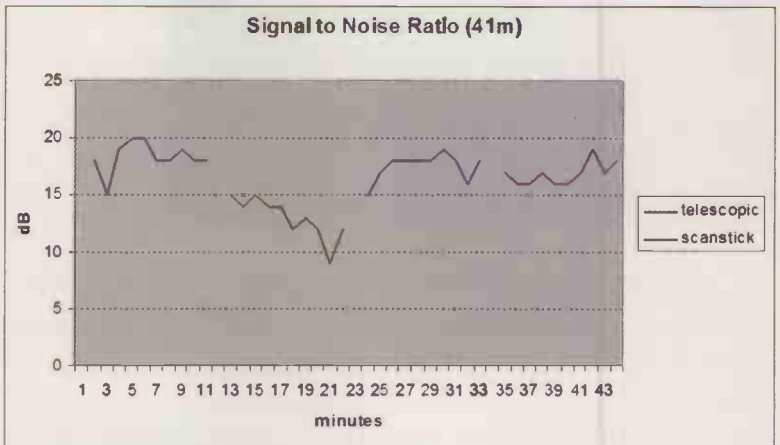

Figure 18: Comparison of SNR (7.230MHz)

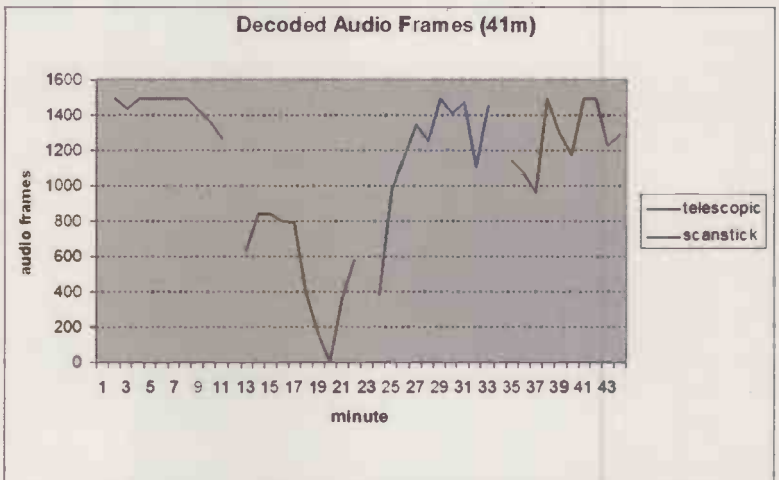

Figure 19: Comparison of the number of audio frames decoded (7.230MHz)

signal levels were reduced when using the Scanstick.

The same aerial test sequence was undertaken as already described and the results are given in **Figure 13**. This data was also converted into a comma delimited text file for import into the spreadsheet software and the graphs are shown in **Figure 14** and **Figure 15**. As can be seen there is a discernable improvement in signal strength and the number of audio frames decoded.

41 metre test

While writing this Merlin Communications, who transmit the BBC World Service to Europe from their transmitter in Dorset, are transmitting irregular DRM tests in the 41 metre band (7.230MHz) instead of 5.875MHz (49 metres). This broadcast was the strongest signal on 41m but reception was very poor with very few AM stations audible.

The reception results are given in **Figure 17** and these results are displayed graphically in **Figure 18** and **Figure 19**. This time the results show the telescopic aerial outperforming the Scanstick.

I repeated the same test the following day to verify the results, unfortunately the broadcast was prematurely terminated (Merlin switched back to 5.875MHz) so the test was incomplete.

The partial results did confirm that the Scanstick did not seem to offer any improvement over the telescopic aerial.

Whether this is because of unusual propagation conditions relating to this particular broadcast or to do with adverse aerial response around this frequency will not be know until there are more DRM transmissions.

Quasar Electronics Limited
PO Box 6935, Bishops Stortford,
CM23 4WP
Tel: 0870 246 1826
Fax: 0870 460 1045
E-mail: sales@quasarelectronics.com

Add £2.00 P&P to all UK orders. 1st Class Recorded - £4. Next day (insured £250) - £7. Europe - £5. Rest of World - £10. We accept all major credit/debit cards. Make cheques/PO's payable to Quasar Electronics Limited. Prices include 17.5% VAT. MAIL ORDER ONLY. Call now for our FREE CATALOGUE containing details of over 300 electronic kits, projects and modules.

QUASAR electronics **0871** CREDIT CARD SALES **717 7168**

Motor Drivers/Controllers

Here are just a few of our controller and driver modules for AC, DC, unipolar/bipolar stepper motors and servo motors. See website for full details.

DC Motor Speed Controller (5A/100V)
Control the speed of almost any common DC motor rated up to 100V/5A. Pulse width modulation output for maximum motor torque at all speeds. Supply: 5-15VDC. Box supplied. Dimensions (mm): 60Wx100Lx60H.
Kit Order Code: 3067KT - **£12.95**
Assembled Order Code: AS3067 - **£19.95**

NEW! PC / Standalone Unipolar Stepper Motor Driver

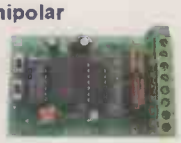

Drives any 5, 6 or 8-lead unipolar stepper motor rated up to 6 Amps max. Provides speed and direction control. Operates in stand-alone or PC-controlled mode. Up to six 3179 driver boards can be connected to a single parallel port. Supply: 9V DC. PCB: 80x50mm.
Kit Order Code: 3179KT - **£9.95**
Assembled Order Code: AS3179 - **£16.95**

PC Controlled Dual Stepper Motor Driver

Independently control two unipolar stepper motors (each rated up to 3 Amps max.) using PC parallel port and software interface provided. Four digital inputs available for monitoring external switches and other inputs. Software provides three run modes and will half-step, single-step or manual-step motors. Complete unit neatly housed in an extended D-shell case. All components, case, documentation and software are supplied (stepper motors are NOT provided). Dimensions (mm): 55Wx70Lx15H.
Kit Order Code: 3113KT - **£15.95**
Assembled Order Code: AS3113 - **£24.95**

NEW! Bi-Polar Stepper Motor Driver

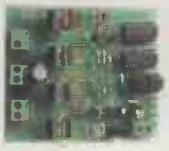

Drive any bi-polar stepper motor using externally supplied 5V levels for stepping and direction control. These usually come from software running on a computer. Supply: 8-30V DC. PCB: 75x85mm.
Kit Order Code: 3158KT - **£12.95**
Assembled Order Code: AS3158 - **£26.95**

Most items are available in kit form (KT suffix) or assembled and ready for use (AS prefix).

Controllers & Loggers

Here are just a few of the controller and data acquisition and control units we have. See website for full details. Suitable PSU for all units: Order Code PSU203 £9.95

Rolling Code 4-Channel UHF Remote

State-of-the-Art. High security. 4 channels. Momentary or latching relay output. Range up to 40m. Up to 15 Tx's can be learnt by one Rx (kit includes one Tx but more available separately). 4 indicator LED 's. Rx: PCB 77x85mm, 12VDC/6mA (standby). *Two and Ten channel versions also available.*
Kit Order Code: 3180KT - **£41.95**
Assembled Order Code: AS3180 - **£49.95**

Computer Temperature Data Logger

4-channel temperature logger for serial port. °C or °F. Continuously logs up to 4 separate sensors located 200m+ from board. Wide range of free software applications for storing/using data. PCB just 38x38mm. Powered by PC. Includes one DS1820 sensor and four header cables.
Kit Order Code: 3145KT - **£22.95**
Assembled Order Code: AS3145 - **£29.95**
Additional DS1820 Sensors - **£3.95 each**

NEW! DTMF Telephone Relay Switcher

Call your phone number using a DTMF phone from anywhere in the world and remotely turn on/off any of the 4 relays as desired. User settable Security Password, Anti-Tamper, Rings to Answer, Auto Hang-up and Lockout. Includes plastic case. 130x110x30mm. Power: 12VDC.
Kit Order Code: 3140KT - **£39.95**
Assembled Order Code: AS3140 - **£59.95**

Serial Isolated I/O Module

PC controlled 8-Relay Board. 115/250V relay outputs and 4 isolated digital inputs. Useful in a variety of control and sensing applications. Uses PC serial port for programming (using our new Windows interface or batch files). Once programmed unit can operate without PC. Includes plastic case 130x100x30mm. Power: 12VDC/500mA.
Kit Order Code: 3108KT - **£54.95**
Assembled Order Code: AS3108 - **£64.95**

Infrared RC Relay Board

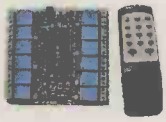

Individually control 12 on-board relays with included infrared remote control unit. Toggle or momentary. 15m+ range. 112x122mm. Supply: 12VDC/0.5A
Kit Order Code: 3142KT - **£41.95**
Assembled Order Code: AS3142 - **£59.95**

PIC & ATMEL Programmers

We have a wide range of low cost PIC and ATMEL Programmers. Complete range and documentation available from our web site.

Programmer Accessories:
40-pin Wide ZIF socket (ZIF40W) £15.00
18V DC Power supply (PSU201) £5.95
Leads: Parallel (LEAD108) £4.95 / Serial (LEAD76) £4.95 / USB (LEADUAA) £4.95

NEW! USB 'All-Flash' PIC Programmer

USB PIC programmer for all 'Flash' devices. No external power supply making it truly portable. Supplied complete with 40-pin wide-slot ZIF socket, box and Windows Software.
Kit Order Code: 3128KT - **£49.95**
Assembled Order Code: AS3128 - **£54.95**

Enhanced "PICALL" ISP PIC Programmer

Will program virtually ALL 8 to 40 pin PICs plus a range of ATMEL AVR, SCENIX SX and EEPROM 24C devices. Also supports In System Programming (ISP) for PIC and ATMEL AVRs. Free software. Blank chip auto detect for super fast bulk programming. Requires a 40-pin wide ZIF socket (not included).
Kit Order Code: 3144KT - **£54.95**
Assembled Order Code: AS3144 - **£59.95**

ATMEL 89xxxx Programmer

Uses serial port and any standard terminal comms program. 4 LED's display the status. ZIF sockets not included. Supply: 16-18VDC.
Kit Order Code: 3123KT - **£29.95**
Assembled Order Code: AS3123 - **£34.95**

NEW! USB & Serial Port PIC Programmer

USB/Serial connection. Ideal for field use. Header cable for ICSP. Free Windows software. See website for PICs supported. ZIF socket not incl. Supply: 18VDC.
Kit Order Code: 3149KT - **£29.95**
Assembled Order Code: AS3149 - **£44.95**

No.1 FOR KITS

www.quasarelectronics.com

Secure Online Ordering Facilities • Full Product Listing, Descriptions & Photos • Kit Documentation & Software Downloads

CIRCUIT IDEAS

Fact: most circuit ideas sent to *Electronics World* get published

The best circuit ideas are ones that save time or money, or stimulate the thought process.
This includes the odd solution looking for a problem – provided it has a degree of ingenuity.
Your submissions are judged mainly on their originality and usefulness. Interesting modifications to existing circuits are strong contenders too – provided that you clearly acknowledge the circuit you have modified. Never send us anything that you believe has been published before though.
Don't forget to say why you think your idea is worthy.
Clear hand-written notes on paper are a minimum requirement: disks with separate drawing and text files in a popular form are best – but please label the disk clearly. Where software or files are available from us, please email Caroline Fisher with the circuit idea name as the subject.
Send your ideas to: Phil Reed, Highbury Business Communications, Nexus House, Azalea Drive, Swanley, Kent, BR8 8HU – Email ewcircuit@highburybiz.com

Random L.E.D. Flasher

The humble L.E.D. flasher has now flashed away for decades with its predictable flash-flash-flash. The circuit shown in Fig. 1, however, produces a random flash, which flashes unpredictably between about 3Hz and 0.5Hz (Fig. 2 showing the voltage at output pin 11). If an extreme brightness L.E.D. is used for D4, the randomness of the Random L.E.D. Flasher gives it a menacing character - as if to say that this is no ordinary L.E.D. flasher, it is a mutant!

The circuit itself is simple. Two square waves, each with short duty cycles (IC1a and IC1b), are combined (IC1c) to produce an irregular pulse at output pin 10. Signal diodes D1-D2, and their corresponding resistors R2 and R4, serve to produce the short duty cycles by speeding up the discharge of capacitors C2-C3. IC1d is in turn enabled by IC1c. However, C4 needs a certain amount of time to charge through R5 before the voltage at pin 13 is high enough to trigger gate IC1d when a pulse is received from IC1c. If the voltage at pin 13 has risen to two-thirds of Vcc when a pulse is received, the L.E.D. flashes. R6 determines the duration of the flash.

The resistor values R1-R6 were carefully chosen, and if these are altered too much, the circuit's randomness may be lost. It is also possible, by experimenting with the values of R1-R6, to produce set sequences of flashes, which could, for instance, simulate a lighthouse.

The Motorola MC14093BCP i.c. should be preferred for IC1. If another make of 4093 i.c. is used, it may be necessary to reduce the values of C2-C4 to, say, 4m7. The Random L.E.D. Flasher was designed to be powered from 9V to 12V, and consumes around 4mA.

Rev. Thomas Scarborough
Cape Town
South Africa

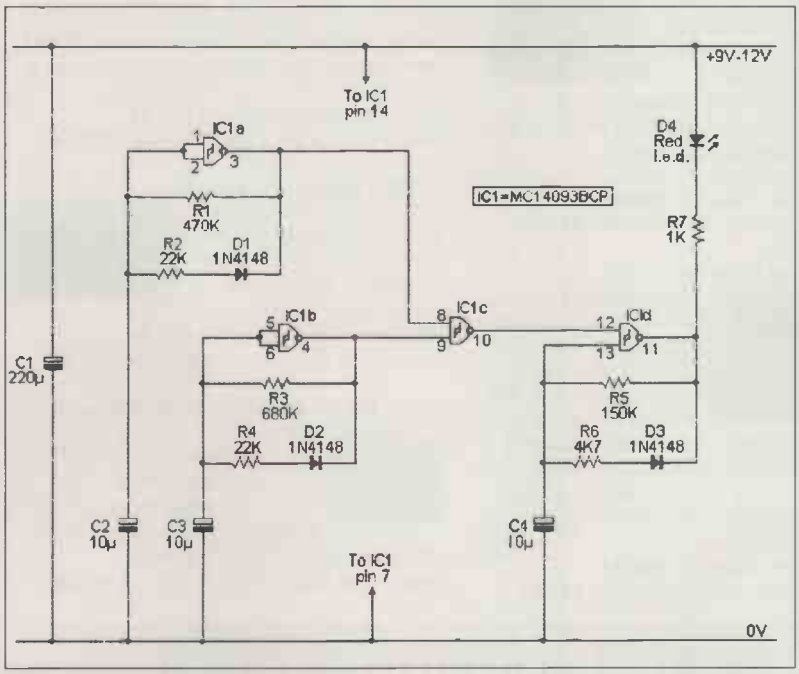

Figure1: Circuit diagram

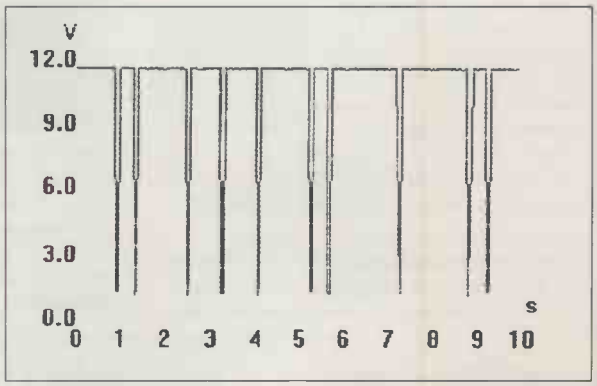

Fig.2: Voltage at output

Novel multivibrator

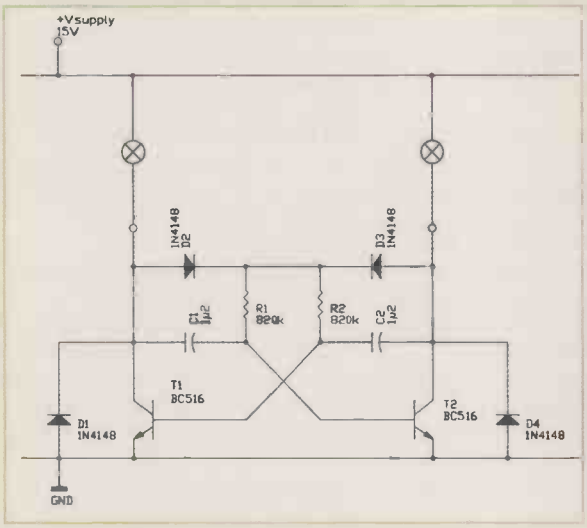

The starting point of this circuit is the ubiquitous two transistor AMV. In the standard circuit there is always the need to have a power-supply connection available at the location of the circuit. It is possible to use the connected loads to supply power to the circuit. As an added bonus we have a circuit that has few connections as possible.

As only one output is connected to ground at any given moment, it is sufficient to insert a couple of diodes to allow supply of the timing circuit. When one output is switched on the timing circuit receives power through the other load. Although it isn't advised to use inductive loads with this circuit, I did provide diodes in parallel with the output transistors. This will also prevent against reverse connection.

The circuit has a number or drawbacks. As the capacitors are charged through the connected load, both outputs conduct current after a switchover. It is therefore necessary to limit the capacitor value. When using this circuit with high efficiency LEDs you can observe a slight glow in the LED that is switched off. It is also necessary to have loads connected on both outputs to have a continuous supply of the timing circuit.

Bernard Van den Abeele
Evergem
Belgium

Sensitive opto link protected to high voltage

It always good to keep external logical inputs devices optically coupled. But what if the line is accidentally exposed to high voltage, say, 265V AC?

The circuit presented in Figure 1 has no problem surviving under such circumstances thanks to ZETEX low saturation, SMD SOT23-6 packaged transistor and Philips PTC (Positive Temperature Coefficient) resistors.

The transistor provides fast intermediate protection of the LED by bypassing the current. The resistors get very hot very quickly and stop the current almost completely. With the high voltage removed, functionality of the circuit will recover completely when the resistors cool down.

R2, R3 are PTC-resistors Philips type 2322 660 56393,. 120 Ohm at +25°C The opto-coupler used is HPCL-2630 series (5mA minimal, 15mA maximum current.)

Nikolai Pavlov
HÃ¸vik
Norway

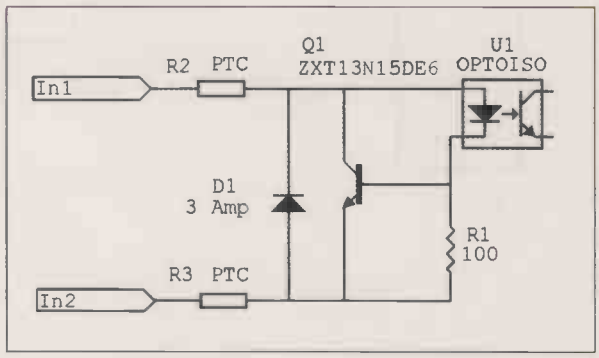

Floating Transducer Buffer and Amplifier

The configuration of **Figure 1** is a cute way to buffer a floating voltage source – primarily inductive transducers such as tachos, guitar PUs, but also photocells etc. The inverting input is a virtual earth so can confer advantages of insensitivity to stray capacitance or resistance, but unlike a conventional virtual earth the impedance is immaterial (within reason) and no current flows.

Extending the circuit to provide gain, as in **Figure 2**, is a hoot. At first glance it looks daft. Actually its performance is very similar to a standard non-inverting configuration, but controlling the gain is more convenient, either by means of a pot or active device referenced to ground, whereby: –

$$\text{Gain} = \frac{R1+R2}{R_1}$$

So, shorting R2 yields the minimum gain of unity, with maximum gain at the element's maximum resistance. Roll-off can be facilitated by a cap across R2.

On a purely vain note, how does a circuit configuration get attributed to the inventor for immortality? Anyone seeen this circuit before?

Andrew S Robertson
Girvan, Ayrshire,UK

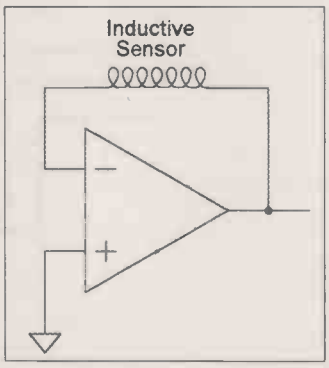

Figure 1

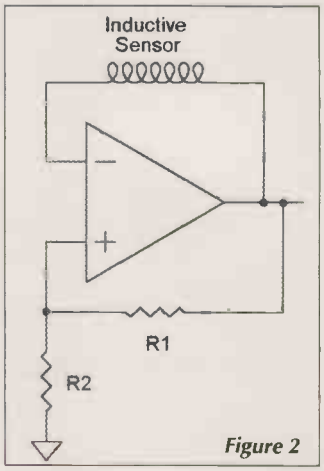

Figure 2

Programmable temperature controller

A programmable temperature controller working by an 'on-off' technique which allows us to set any three-digit reference temperature and control the temperature of a bath in accordance with the reference temperature is presented here. Referring to Fig.1, the electric heater that heats the liquid is switched on or off by relay contact R1 of the relay R controlled from a digital comparator. A standard temperature transducer such as a thermistor included in a Wheatstone bridge (not shown in the figure) senses the temperature of the liquid and produces an analogue output in the range of 0-to-10 volts (after amplification) for the desired temperature range of measurement. This analogue voltage from the sensor is digitised by a 12-bit ADC and is used to address a 4Kx12 EPROM. This EPROM has a lookup table in it corresponding to 12-bit-binary-to-three nibble BCD conversion. These three BCD nibbles read from the EPROM are driven to BCD-to-7-segment Decoders for producing a decimal display corresponding to the BCDs in the 7-segment LEDs displaying the digits of the temperature being currently sensed.

The reference temperature is set manually with the help of a keyboard of 12 keys. The data entered from the keyboard sends three successive digits to the latches and these three BCDs are decoded and displayed in another set of three LEDs displaying the reference temperature. Therefore, one can see simultaneously the reference temperature and the present temperature of the liquid.

Since the EPROM is always enabled, the data of the current temperature is available from it as addressed by the ADC.

We have therefore a word of three BCDs of 12-bits representing the current temperature and another word of three BCDs of 12 bits representing the reference temperature. In order to produce a hysteresis in on-off levels, an additional bit is added for the current temperature and the reference temperature in their least significant bit position. A '0' is added as the extra bit for the present temperature and a bit 'L' from the comparator is used as least significant bit of reference data.

These two data words of current temperature and reference temperature are compared in a 13-bit digital comparator. Whenever the current temperature is lower than the reference temperature then the L output will be '1' (high) and when it is not L will be '0'. This L bit is hardwired as the least significant bit of the reference data word. While in

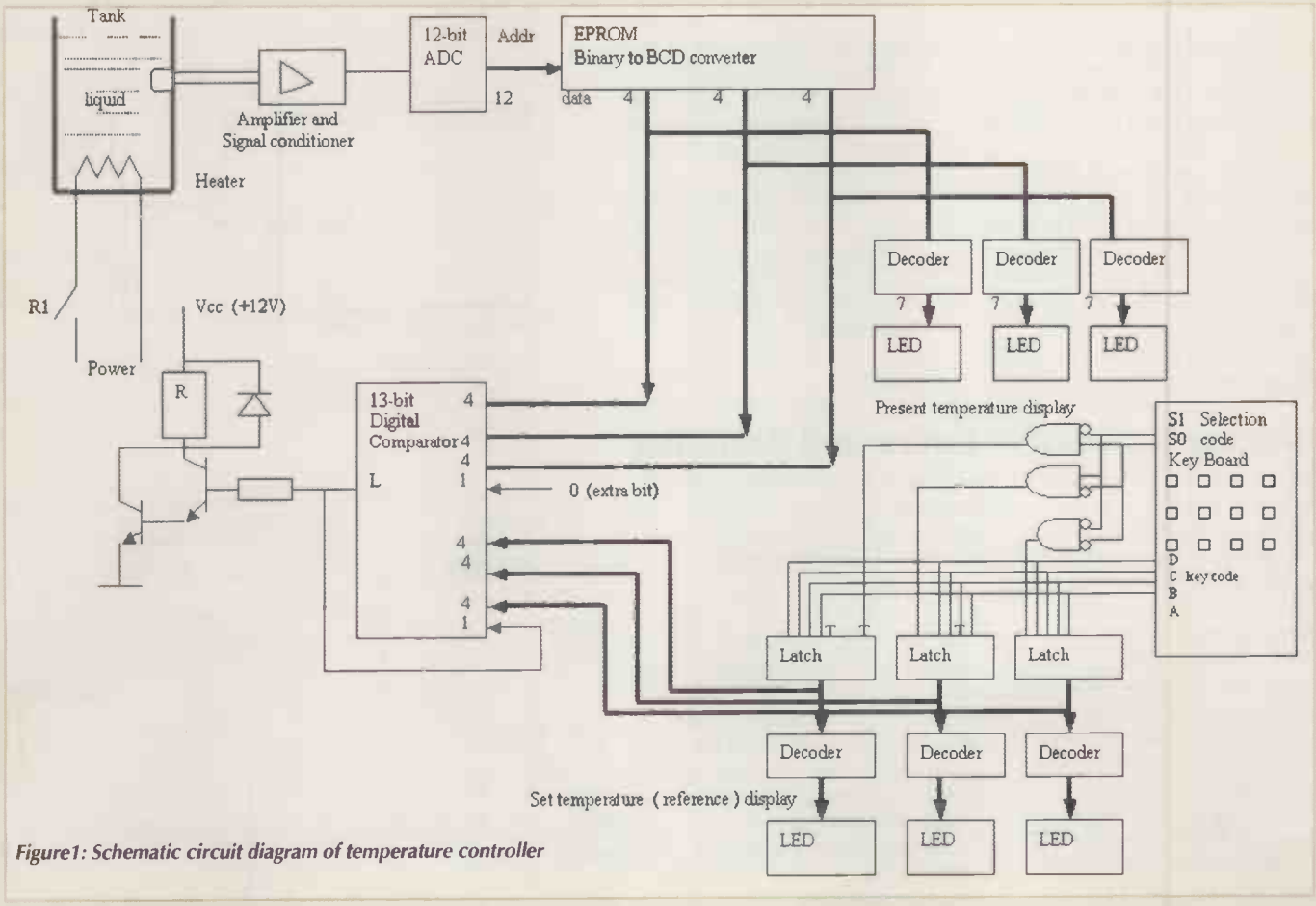

Figure1: Schematic circuit diagram of temperature controller

Figure 3: Debounced key

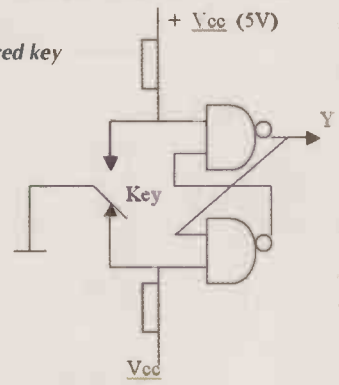

Table 1: Typical switching sequence

Current data word 12-bit data plus a bit of 0	Reference data word 12-bit data plus a bit of L	Status of temperature Comp	Temp
0000 1000 0010 0	0000 1000 0011 1	LOW	Increasing
0000 1000 0011 0	0000 1000 0011 1	LOW	Increasing
0000 1000 0100 0	0000 1000 0011 0	HIGH	Decreasing
0000 1000 0011 0	0000 1000 0011 0	HIGH	Decreasing
0000 1000 0010 0	0000 1000 0011 1	LOW	Increasing
0000 1000 0011 0	0000 1000 0011 1	LOW	Increasing

comparison, if L is '1' then the relay circuit getting '1' to it operates the relay R to close the contact R1 switching on the power to the electric heater. Also L being '1', its appearance as least significant bit in reference temperature keeps the comparator level a little more than the set reference temperature (Tr + Dt, where Tr is the reference set due to 12-bits and Dt is the magnitude corresponding to the least significant bit). Naturally, the temperature would rise causing an increase in the temperature. The relay would keep its closed status until the present temperature reaches above the reference level after which L would become '0'. L becoming '0' would make the reference level a little lower compared to the previous level (Tr - Dt) and the relay switches off the heater making the current temperature reduce. Now, the current temperature has to fall below this level (Tr - Dt) to make L as '1' again causing the heater to switch on. This arrangement therefore keeps a hysteresis in it avoiding oscillations in switching. Table 1 illustrates the sequence of switching observed for a typical temperature set as reference (0000 1000 0011) with the successive data of current temperature word and reference temperature word.

The circuit of the keyboard producing the key code for the depressed key is illustrated in Fig.2. The keyboard contains 12 de-bounced keys. The depression of one of 10 decimal keys would produce the corresponding code (DCBA) from a standard 1-of-16-to-4 encoder. Besides the 10 keys representing the decimal digits two more keys are used here for supporting the setting up of the three digits reference temperature.

A 2-bit binary counter (two JK flip flops represented by B and A) is used to provide the selection code S1S0 used for selecting the present BCD for the latch. The key Bn is used in the beginning of the loading process which sets a monostable multivibrator on for an appropriate period (30 seconds) to complete the loading process. This MSMV sets the enable signal for the tri-state controller after which the encoder output DCBA and the selection code S1S0 would be available to the latches of the display system. The St key is used for starting that clears the 2-bit counter making S1S0 as '00'. This also sets the counter into count mode. After this, if any key, say '5', is depressed, the encoder output DCBA would be 0101 and the S1S0 would be 01. Referring to Fig.1, this BCD would go to the least significant digit of the latch and displays the same. Subsequent depression of the key will load to the second latch and the next one to the latch of the most significant digit. By this way loading of the reference data is completed.

The de-bouncing needed for each key is produced in a standard circuit shown in Fig.3. While the controller is running, if the reference temperature is needed to be changed, then what all required is to operate the keyboard as to set the new reference temperature.

As an alternative to the 13-bit digital comparator, two DACs accompanied by an analogue comparator could be employed as well.

Figure 2: Keyboard

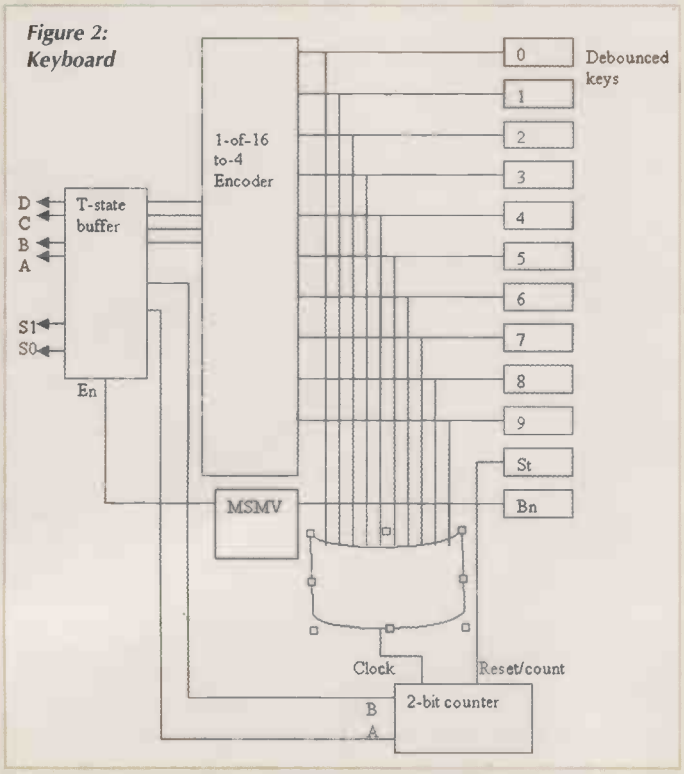

H. Çamur and K. Balasubramanian
Lefke
Turkish Republic of Northern Cyprus
Turkey

Using a parallel port to measure resistance

This simple inexpensive design permits precise measurement of sample resistivity for laboratory experiments through a PC's parallel port. The power consumption of the entire circuit is very low, in of the order of only few mA, it doesn't require any external power supply and can use some of the data bits from the parallel port for its activation. The MAX 187 serial 12 bit ADC requires only a three wire connection for interfacing with a PC's LPT port and simplifies the design. The control program can be written in any language in a simple way. The requirement of the control program has to set high-to-low chip select (/CS) signal to pin 6 of MAX ADC for its to start conversion.

The control program monitors the pin 7 of ADC to its transition from high to low for its end-of-conversion (EOC) and generates a serial clock pulse SClk, through ADC's pin 8, to receive 12 bits of converted data starting from MSB first (i.e., 12th bit) and the subsequent serial clock (SClk) pulses for the remaining bits. The 12th serial clock (SClk) receives the LSB bit. Whatever 12 bit data received is the digital mapping of the analog information connected to pin 1 of ADC MAX 187 which will in turn the value of the sample resistance (i.e., resistivity) Rmeas connected in shunt with the fixed resistance R1 as per the design shown in fig.1. The potential divider configuration gives out the Vin value as per the formula Vin = Vref [Rmeas / (R1+ Rmeas)]. Pin 4 of ADC provides precise reference out put of 4.2 volts by receiving supply from the PCs LPT port to pin 1 and hence the accurate measurement of sample resistivity is possible to get with this design. The selection of R1 is in such a way to get full scale measurement of the sample. For MAX 187 the permissible input range is 0 to 5 volts. The control program is a not a complicated one, since it simply requires 'inport' (LPT port read) and 'outport' (LPT port write) call functions through LPT1 status port 0x379 and control port 0x37a respectively for the signals /CS, Sclk and Data in. For power supply requirement the data bits D4 through D6 of LPT1 data port 0x378 can be made high by sending the appropriate data say 0x70 to data port 0x378 while acquiring data using this design.

Figure 1: PC's LPT port measures resistivity of the sample

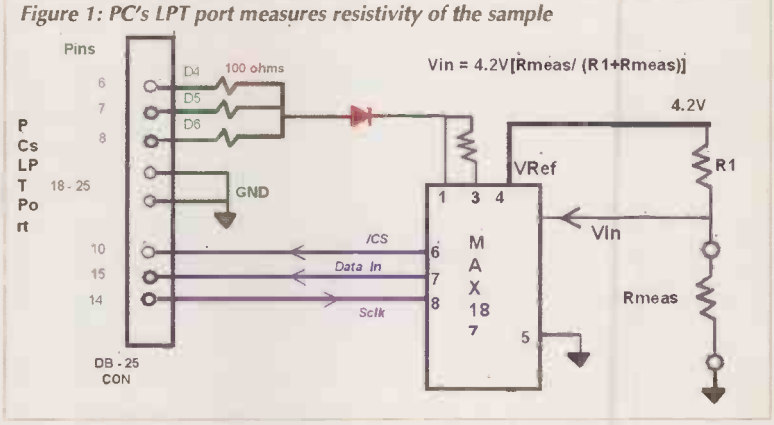

J. Jayapandian
Tamil Nadu
India

Zener Diode Model for SPICE emulators

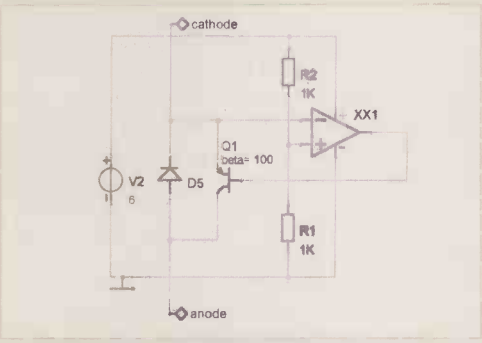

Figure 1: Zener diode 5V reverse breakdown

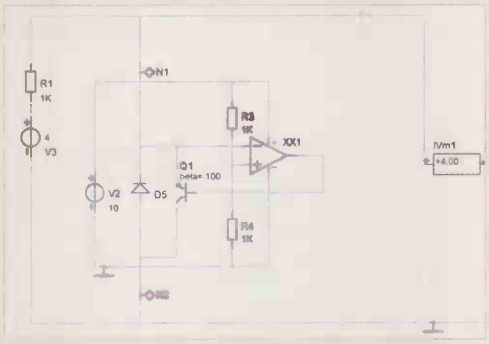

Figure 2: 5V Zener diode test circuit, no avalanche condition

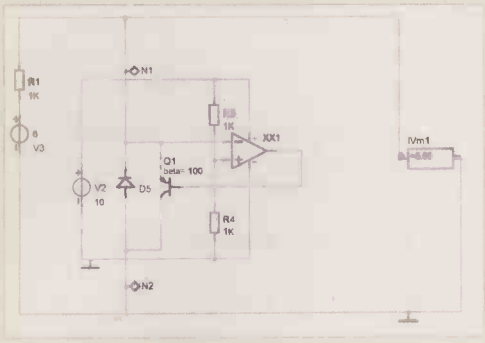

Figure 3: 5V Zener diode test circuit, reverse avalanche

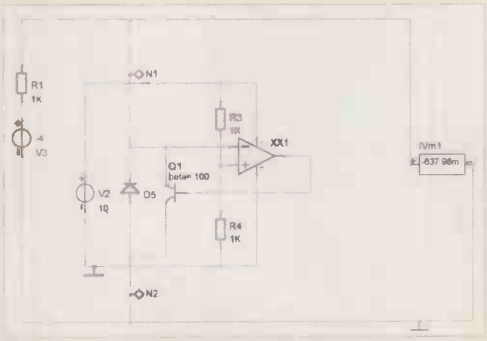

Figure 4: 5V Zener diode test circuit, forward mode

This simple circuit I entered into SPICE as a 'Zener diode, sub circuit' as to my surprise the SPICE database did not have a Zener diode which met my specifications. If someone constructed it (I can't think why) but if they did it might not work as it the spice components are idealised and no heat dissipation, or component tolerances have been simulated.

Judging by the standard of EW publications I am sure not many readers need a description of the circuit, but the circuit may save a few people some time.

Anyway the way I describe it is to say that unless you want rail to rail output voltages from the op-amp, op-amps always make the differential inputs both have the same value as a result of varying the output. So as a consequence of this transistor Q1 will be turned on or off to a value that effectively shorts the PSU until the hard working voltage source drops the voltage to the required value.

See 'Creating a part from a circuit', from your SPICE documentation.

John RR Clarke
Belfast, UK

Piezo actuator driver

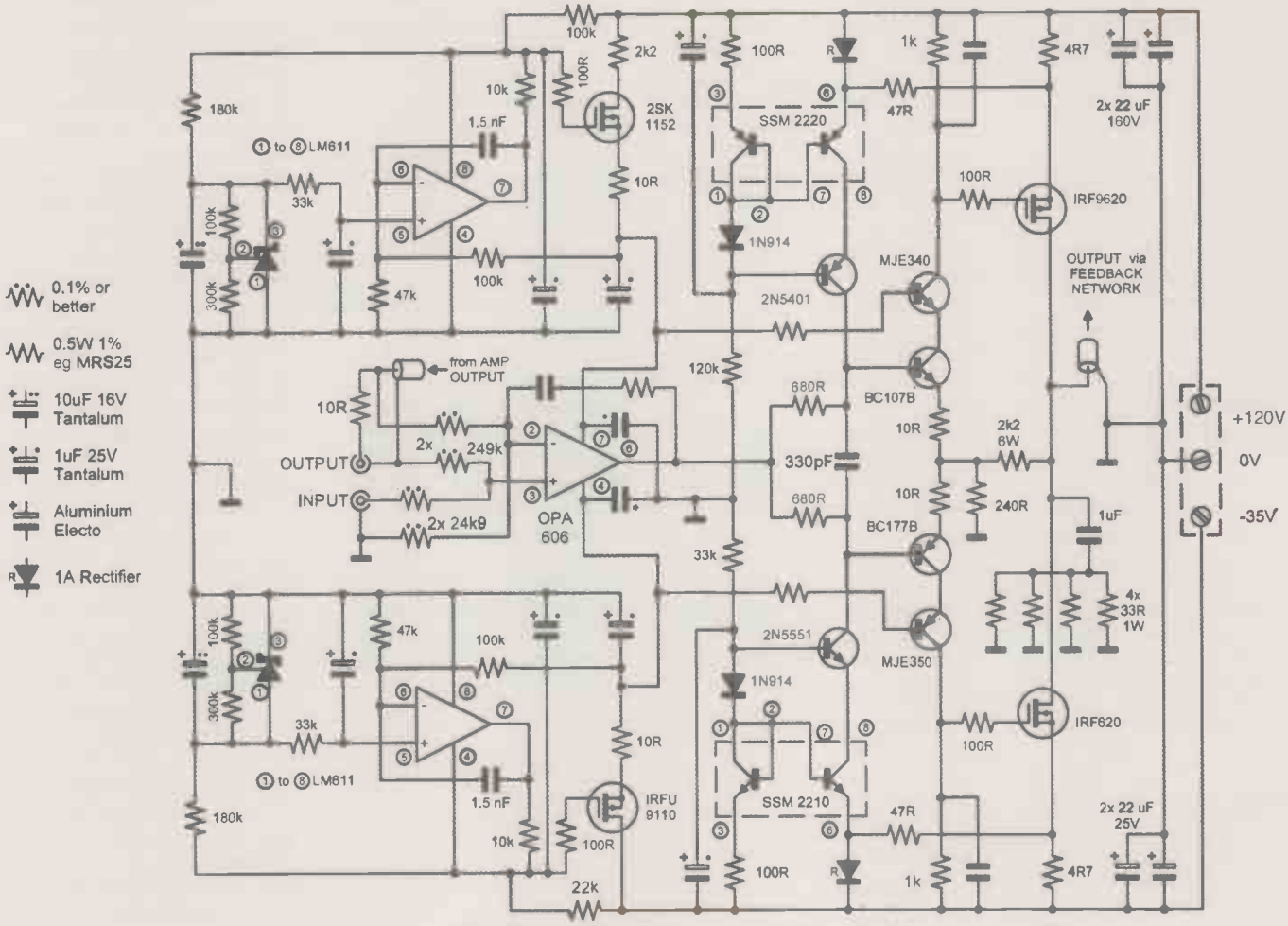

This idea is an amplifier for driving low voltage piezo actuators, although it may have other applications. It evolved from another of my designs for driving Langmuir probes (as a plasma physics diagnostic).

Low voltage piezo actuators operate with about 100V maximum. They exhibit relatively large hysteresis around zero volts so they are usually driven from unipolar source. The amplifier is therefore supplied from asymmetric power supplies, although their exact value was determined by the power transformers available. Low voltage piezo actuators also have large capacitance, 3mF in the case of the particular devices that the amplifier drives. This design seems quite unfazed by such a load. The amplifier has a bandwidth well in excess of 50kHz, but consideration must be given to heatsinking and cooling if the amp is expected to drive capacitive loads at high levels and high frequencies.

The circuit may appear over complex because I took the opportunity to try a few circuit ideas. I must point out that the biasing circuit for the output stage using the two current mirrors I remember from an article by Eric Margan (I think) published in EW+WW sometime in the 1980s. Unfortunately I don't recall any more of the details, and in fact I had to sort of reverse engineer it to sort out the details. The bias circuit is intended to stop the output transistors from turning off and thereby prevent crossover distortion. Cascoded transistors driving the output MOSFETs (BC107B/MJE340 and BC177B/MJE350) deliver high voltage capability while maintaining characteristics largely determined by the small signal transistors.

A high performance op-amp was used for good input specs. DC and low frequency performance were of primary importance there. The differencing amplifier feedback topology was employed to assist in dealing with earth loops that may have arisen, The PCB was laid out with the input at one end and the output at the other, and a short piece of co-ax was used (because I'm lazy) to get the signal from the output to the feedback network without having to route it or the feedback signal past hostile parts of the circuit.

Power for the input op-amp is derived from the high voltage supplies via series regulators built around the LM611 reference and op-amp which drives a small power MOSFET. A simpler shunt regulator could be used but probably with lower efficiency, although that is not a serious issue in this application. It was an idea I wanted to try.

The output stage is essentially a current feedback amplifier, so its bandwidth (and stability!) is determined by the magnitude of the inverting input impedance (as seen by the 2k2/240R feedback network) and the 2k2 resistor in the feedback network. The Margan bias scheme sets the quiescent current in the output stage. In fact the quiescent current is the higher of the two that the separate circuits seek to impose. Since the two circuits directly monitor the output MOSFET's currents there is no need for thermal compensation. Basically each bias circuit remains inactive unless the current in the associated output device starts to fall below the preset level (approximately 21mA).

Phil Denniss
Sydney, NSW
Australia

Absolute harmonic filter for RF

Whilst it is easy to buy harmonically pure signal generators for operation at audio frequencies, harmonically pure RF signal generators for use at 1MHz and above do not exist. The best I have found has harmonics at –60dBc.

The widely quoted solution to this problem is to use a low-pass filter (or notch-pass filter) on the output of the signal generator to filter out the harmonics. However, if the filter itself generates harmonics, which very easily happens, the generator/filter harmonics cannot be predicted by using the measured filter attenuation characteristics and the measured generator harmonic levels. Furthermore, UKAS accredited labs cannot calibrate harmonic distortion at 1MHz, and neither can the UK National Physical Laboratory (NPL).

A simple answer to this problem is to use a quarter-wave transformer as a harmonic filter. A low-loss open-circuit transmission line will act as a simple filter with negligible harmonic distortion of its own. Although this will not make a particularly good filter, in terms of the amount of rejection of an individual harmonic, it does make an absolute standard. This absolute standard can then be used to verify any low-pass filter that you make. Beware of SPICE simulations predicting 70dB attenuation of the harmonic; in practice you may only get 15dB attenuation due to the non-zero attenuation of the line.

The technique is to drive the signal generator through your 'home-made' low-pass filter into a wave analyser (spectrum analyser or oscilloscope with FFT capability) and view the harmonics. The absolute filter is then shunted across the low-pass filter output. If the harmonic amplitude seen on the wave analyser is constant, then the signal generator/low-pass filter combination is not making a significant harmonic contribution to the measurement.

It is to be expected that the use of the absolute filter will also give some attenuation at the fundamental frequency. This loss needs to be measured and an equivalent pad (resistive attenuator) used when the absolute filter is not in circuit. This additional pad is essential to maintain a constant amplitude of the fundamental into the wave analyser.

Low-loss coax should be used for the absolute filter, since better attenuation is achieved with low loss cable. At 1MHz, RG58 is acceptable. Figure 1 shows the length of the transmission lines in nanoseconds for use with a 1MHz fundamental; values can be scaled for higher frequencies so that at 10MHz (fundamental), for example, an 8.333ns line is needed to attenuate the third harmonic. When cutting the cable to length, I strongly suggest that you deliberately cut it too long in the first instance. Measure the notch frequency, calculate, cut and iterate; cutting the cable down to the right length in steps.

Figure 1 also shows a useful in-line transmission line absolute filter which attenuates the second, third and fourth harmonics simultaneously. This absolute filter may give enough attenuation for your purposes, without using a separate low-pass filter at all. Of course to test whether or not this simultaneous filter is good enough, you could use it in conjunction with the quarter wave absolute filters discussed above.

For microwave work, the filter sections can be made in microstrip or coplanar waveguide. The optimum line impedance in terms of output reflection coefficient for the simultaneous harmonic filter is 115.5W (in a 50W system), giving an output VSWR of 1. Using 50W lines this filter otherwise gives an output VSWR of 5.3. However, since this application does not involve amplitude accuracy, this high level of mismatch should not cause problems, and in any case the filter could be followed by a pad if needed.

For the final filter configuration, combining the simultaneous harmonic filter and the quarter wave filters, the optimum line impedance for matching is 106W, giving an output VSWR of 1.21.

When using coax, I would not bother using anything but 50W cable (in a 50W system). Even trying to put 75W coax into 50W plugs involves merging parts from 50W and 75W plug kits and can be a nuisance.

Note that badly made cables can themselves introduce harmonic distortion and for RF transmitters in particular, passive intermodulation distortion (PIM) can be a problem. However PIM levels of -120dBc to -160dBc are achievable, so a well-made cable should be ok at -100dBc.

Leslie Green CEng MIEE
Ilford,
Essex,
UK

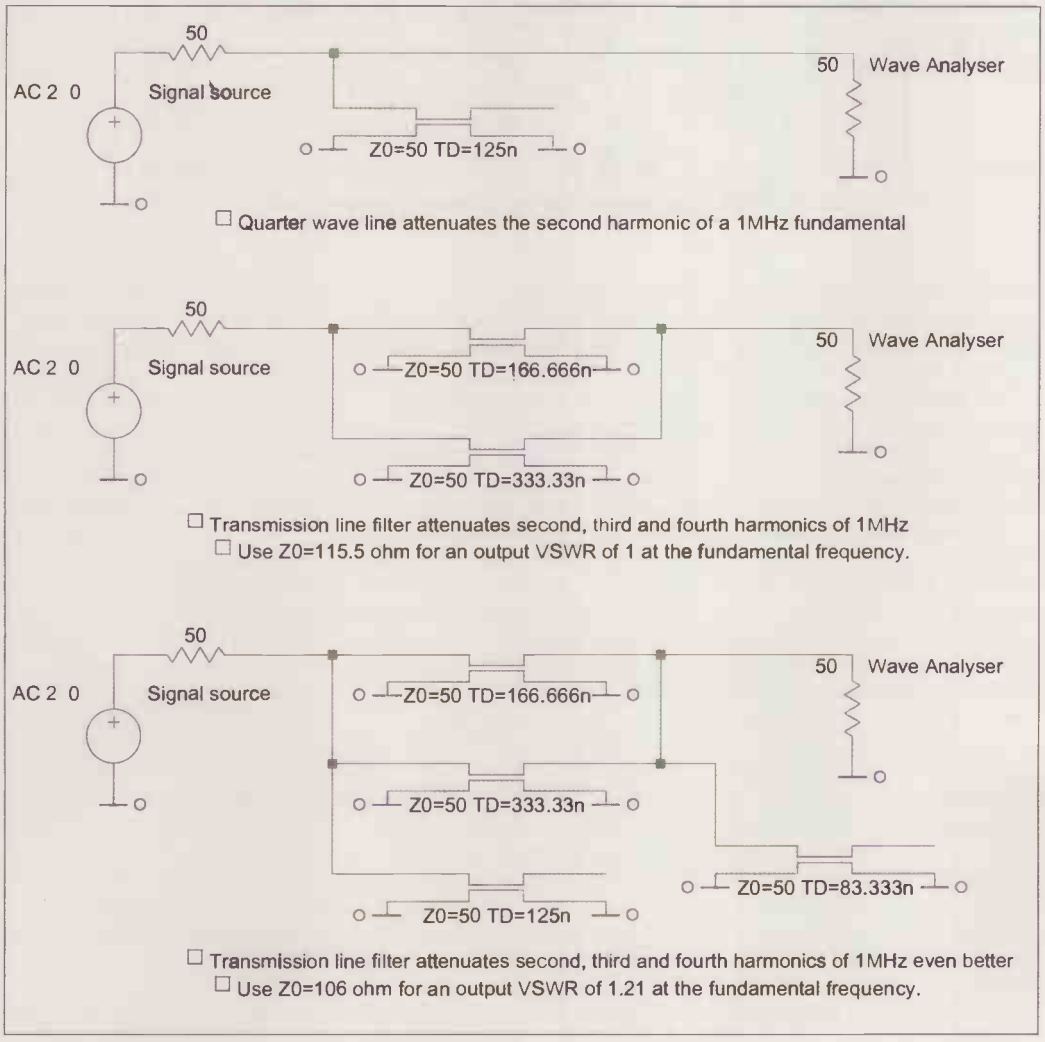

CML Laser Driver

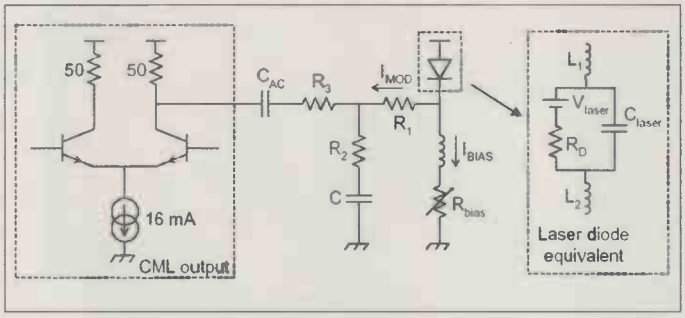

This circuit idea is a very simple laser driver that can be used at high bit rates. No dedicated laser driver chip is needed if CML is used for the data signal. This results in a reduced PCB board area, power consumption and complexity. Of course such a simple laser driver has less capabilities than a real laser driver, so no full DC coupling or drive currents above 16mA are possible. But modern lasers show lower and lower drive currents, and many data signals have no DC content due to line encoding (Ethernet) or scrambling.

The topology of the interface consisting of R1, R2 and C is often used, but no clear design strategies are described in literature, datasheets or application notes. So most designs are trial and error, and rely on high-speed measurements of the optical output waveform. This requires expensive equipment and can be time consuming. To our knowledge, the formulas presented in this paper have not been used before to design the interface between the driver and the laser.

CML (Current Mode Logic) is a popular interface for high-speed laser drivers. In this circuit, we use a CML driver to directly drive a laser diode, thus avoiding the need for a dedicated laser driver chip. This is an elegant and cost effective approach when the laser chip does not require high modulation currents or full DC coupling.

A CML output stage can sink 16mA of current out of the parallel combination of a 50W collector resistor and the external load. A straightforward DC coupling of the laser diode is no option, as the forward DC voltage drop across the laser diode (which can be bigger than 1V) would disturb the current division between the internal load and the laser so that the current through the laser would be too small. But AC coupling via CAC is possible when the data power spectrum does not extend to DC. We assume a data pattern without DC content, and CAC properly chosen, so that its charge voltage is stable after the circuit run-in, and that its impedance is negligible throughout the data spectrum. Due to the low impedance of the forward biased laser diode, special care is required to control parasitic inductances, which can cause severe ringing on the optical output waveform transmitted by the laser diode if not properly compensated. The DC bias current for the laser diode is set simply by a potentiometer (Rbias), isolated from the data path by a series inductor (choke).

In the frequency range of interest the capacitor Claser can be neglected, so the AC impedance of the forward biased laser diode can be simplified to only contain inductance (L1+L2) and resistance (RD). An external R2C shunt cancels the parasitic inductances if R2 = R1+RD and if C = (L1+L2) / (R1+RD)_. The R2C shunt however increases the rise and fall time of the laser current because it causes a time constant t = R2C = (L1+L2) / (R1+RD) in the transfer function of the CML output current to the laser modulation current. The higher we choose R1, the lower we can make this time constant, but the lower the modulation current becomes. Resistor R3 can be added to reduce the modulation current. We designed a 622Mbps laser driver for a laser with L1+L2=4nH, RD=5W and Vlaser = 1.1V, and we selected the following component values: R1 = 20W, R2 = 25W, R3 = 0W, C = 6.4pF, CAC = 1mF, Rbias = 82W. This results in Ibias = 20mA, IMOD = 10mA and a 220pS rise and fall time. We put the laser as close as possible to the laser driver but it is also possible to use an impedance controlled transmission line to connect the laser to the driver.

Johan Bauwelinck
and
Dieter Verhulst
Gent
Belgium

Battery discharger

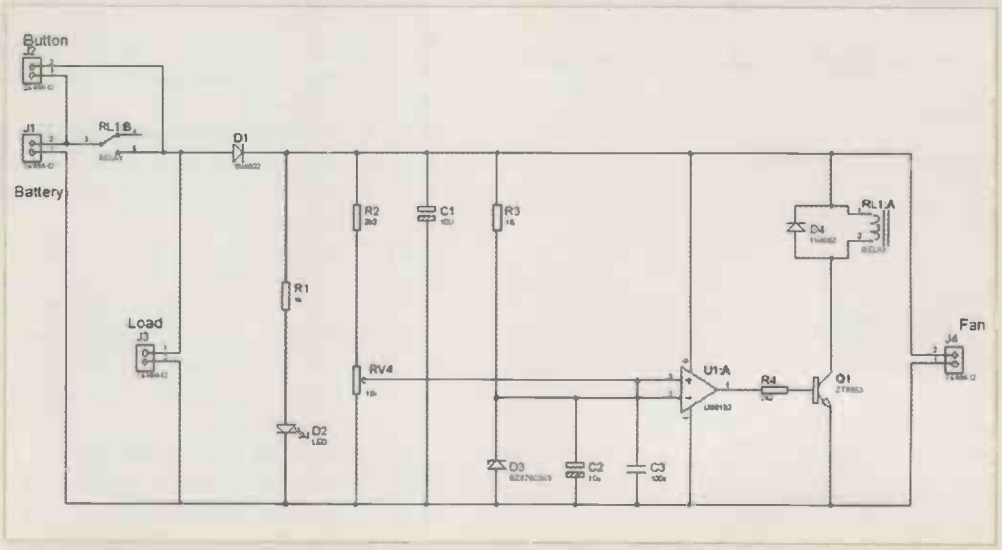

This circuit is a Nicd/Nimh discharger. I use it frequently to ensure battery packs are fully discharged prior to fast recharge. Two major advantages of this circuit are that firstly it is powered from the battery being discharged and secondly once the battery has been discharged no further drain occurs. This means that the discharger can be left connected indefinitely without any problems.

The circuit operates by switching the battery to the load when the relay is energised. To operate, connect the battery pack and press the start button. If the correct polarity, the battery voltage is passed to the remainder of the circuit and if the battery voltage sensed by the op-amp is higher than the cut-off voltage set by RV4 and zener diode reference D3, the relay is energised. Once the voltage drops below the cut-off point, even momentarily, the relay will drop out and no further current at all is drawn from the battery.

The relay coil voltage should be chosen to suit the battery voltage. I use a 12V relay for 8 cell packs as the relay works quite happily to below 8 volts. Contact rating and load resistor value and rating should be chosen to give an appropriate discharge time, perhaps 1 hour for a fully charged pack. Cut-off voltage is set at 1 volt per cell. A fan can be connected for larger packs.

Allan Patrick
via e-mail

£11.99

Available from *Electronics World*

All tracks on this CD were recorded on DAT from cylinders produced in the early 1900s. Considering the age of the cylinders, and the recording techniques available at the time, these tracks are of remarkable quality, having been carefully replayed using modern electronic technology by historian Joe Pengelly.

21 tracks – 72 minutes of recordings made between 1900 and 1929. These electronically derived reproductions are no worse than – and in many cases better than – reproductions of early 78rev/min recordings – some are stunning...

Pandora's drums

Unique and atmospheric music recorded in the early 1900s – the days *before* 78s.

Use this coupon to order your copy of Pandora's drums

Please send me ..... CD(s) at £11.99 each including VAT

Cheque ❑

Credit card details ❑ tick as appropriate

Name

Address

Phone number

Total amount £.....

Make cheques payable to TELEVISION
Or, please debit my credit card.

Card type (Master/Visa)
Card No
Expiry date

Please mail this coupon to *Electronics World*, together with payment.
Address orders and all correspondence relating to this order to Pandora's drums, *Electronics World*, Highbury Business Communications, Nexus House, Azalea Drive, BR8 8HU

Track

1 Washington Post March, Band, 1909
2 Good Old Summertime, The American Quartet 1904
3 Marriage Bells, Bells & xylophone duet, Burckhardt & Daab with orchestra, 1913
4 The Volunteer Organist, Peter Dawson, 1913
5 Dialogue For Three, Flute, Oboe and Clarinet, 1913
6 The Toymaker's Dream, Foxtrot, vocal, B.A. Rolfe and his orchestra, 1929
7 As I Sat Upon My Dear Old Mother's Knee, Will Oakland, 1913
8 Light As A Feather, Bells solo, Charles Daab with orchestra, 1912
9 On Her Pic-Pic-Piccolo, Billy Williams, 1913
10 Polka Des English's, Artist unknown, 1900
11 Somebody's Coming To My House, Walter Van Brunt, 1913
12 Bonny Scotland Medley, Xylophone solo, Charles Daab with orchestra, 1914
13 Doin' the Raccoon, Billy Murray, 1929
14 Luce Mia! Francesco Daddi, 1913
15 The Olio Minstrel, 2nd part, 1913
16 Peg O' My Heart, Walter Van Brunt, 1913
17 Auf Dem Mississippi, Johann Strauss orchestra, 1913
18 I'm Looking For A Sweetheart And I Think You'll Do, Ada Jones & Billy Murray, 1913
19 Intermezzo, Violin solo, Stroud Haxton, 1910
20 A Juanita, Abrego and Picazo, 1913
21 All Alone, Ada Jones, 1911

NEW PRODUCTS

Please quote *Electronics World* when seeking further information

LIN Bus transceiver with on-board 5 V power supply

A LIN Bus transceiver IC with an on-board voltage regulator providing a 5V DC supply has been introduced by Allegro MicroSystems, allowing the development of simple, inexpensive slave nodes in a LIN Bus system.

The new A8423 provides all the physical interface requirements of the LIN (Local Interconnect Network) serial communications bus. The integrated voltage regulator, which is permanently enabled, provides a regulated 5V output with a current limit of more than 50mA - sufficient to power a microcontroller handling the LIN slave node protocol.

The LIN transceiver is compatible with LIN Bus systems conforming to the LIN Protocol Specification, Revision 1.2. It provides all the necessary interface and timing control to convert signals to and from the bidirectional LIN Bus to individual transmit and receive signals at logic-compatible levels.

Normal operation is over the voltage range 7-30V. The device will handle 40V transients during a load dump, and it meets the requirements of ISO7637 for handling automotive transients. ESD protection to 4kV is provided on the LIN and 'wake' pins. It is supplied in an 8-pin small-outline surface-mount package.

Allegro MIcrosystems
www.allegromicro.com

New analysiers trigger, capture and analyse RF signals

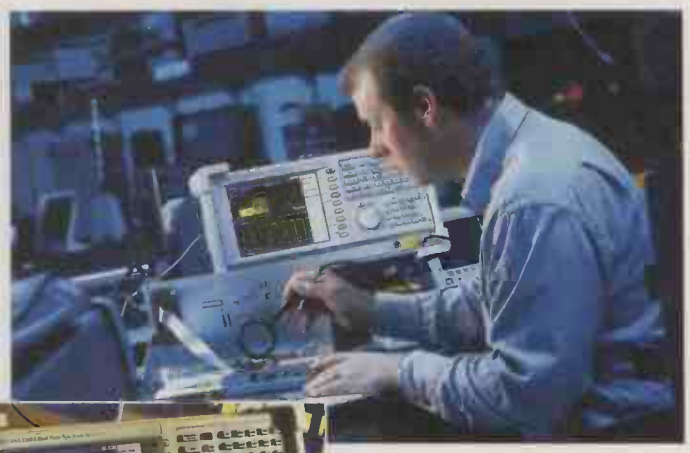

RF signal characteristics are becoming more complex as RF communications increasingly replace wired technologies in applications ranging from inventory identification to video games.

Tektronix has employed the technology in its new portfolio of real-time spectrum analysers, including the RSA2200A Series and the RSA3300A Series. These instruments address time-varying and transient RF signals by triggering on events that swept spectrum and vector signal analysers fail to see, seamlessly capturing and storing a record of signal activity and enabling in-depth analysis and troubleshooting with time-correlated multi-domain visual displays.

Today's broad ranges of RF applications are as diverse as spectrum monitoring and RFID, but each has a common denominator: the signal is present one moment, absent the next, and variable over time. These signals use modulation, frequency hopping, bursting, and other techniques and continue to elude swept spectrum analysers. Designers and researchers working on advanced RF applications need efficient tools that can trigger, capture and analyse the spectral behaviour of rapidly changing signals over relatively long time periods.

Tektronix' RSA Series meet these demands by acquiring a seamless time record of a span of RF frequencies all at once. This record of real-time signal behaviour supports powerful analysis tools such as the spectrogram display, which plots frequency and power amplitude changes over time—many minutes of time in some cases. The frequency, time and modulation domains are all visible in time-correlated displays, while the spectrogram itself summarises the long-term view, enabling an intuitive, three-dimensional look at the time-varying signal behaviour, otherwise unseen in traditional frequency-domain displays.

Equally important is the frequency mask trigger, which allows users to define both the frequency and amplitude (power) conditions under which the instrument captures the signal information. This unique feature enables engineers to quickly hone in on suspect frequencies or monitor signals continuously but acquire them only when the signal changes. In addition, the RSA Series' long memory enables engineers to capture all signal information just once and immediately perform a complete analysis. The event (for example, an interfering or transient signal) being analysed may only happen once or very infrequently, so it is critical to capture all the information the first time.

The new series comprise four models in total: RSA2203A, RSA2208A, RSA3303A, and RSA3308A. These encompass frequency ranges up to 8GHz with various memory depth configurations. Real-time spectrum analysis is standard on all models.

Tektronix
www.tektronix.com

Miniature bright spark withstands two million switching operations

Measuring only 5 x 5mm, the CAM02X from EPCOS is an extremely compact switching spark gap that satisfies the demand for smaller and smaller electronic component solutions.

Switching spark gaps have an ignition time in the region of 30ns, whereas semiconductor solutions take up to six times as long. What's more, the current induced in switching spark gaps can be substantially higher than in semiconductors.

They can be operated over the entire temperature range from -40 to +150°C without any appreciable loss of power. The CAM02X can withstand two million switching operations without any appreciable variation or increase in breakdown voltage.

Epcos
www.epcos.com

JOHN RADIO ELECTRONIC TEST AND COMMUNICATION EQPT.

MASSIVE RETIREMENT CLEARANCE SALE

30.00SQ FT OF TEKTRONIX-HP-AGILENT-MARCONI-PHILIPS-RACAL ETC.,

Over the rest of this year at our bulk Smithies Mill site sales by auction-Tender-Offer-all welcome private or trade-single or bulk items. Equipment sale floor 6000sq ft +25.000sq ft of adjoining buildings plus 9000sq ft will be slowly added from our Whitehall Works headquarter site.

Open weekdays 9am-5pm and Saturday mornings to 1:00pm
Closed dinner 1- 2pm

ALWAYS PHONE FOR APPOINTMENT FIRST.

Item lists-photos-site map-on
website www.johnsradio-uk.com www.johnsradio.com
email: johnsradio@btconnect.com

Location M62 Junction 27, A62 to Huddersfield, 1 mile Birstall Smithies Lights (6 roads) look to your left, site under factory chimney with aerials on top, road second left, Smithies Moor Lane, 100yds second entrance on left.

Johns Radio, Smithies Mill, Birstall Smithies Lights, 883-885 Bradford Rd, Batley, West Yorks WF17 8NN-8NS.

Phone - 01924 442905 - Fax - 01924 448170

Our normal sales, workshop, repairs and calibration will continue until clearance of all items.

Contact Patricia at Whitehall Works-84 Whitehall Rd East, Birkenshaw, Bradford BD11 2ER.

Phone - 01274 684007 - Fax 01274 651160

NEXT SALE FRI-SAT DECEMBER 5-6
DETAILS www.tech-asset.co.uk
info@tech-asset.co.uk

WATCH SLIDES ON TV
MAKE VIDEOS OF YOUR SLIDES
DIGITISE YOUR SLIDES
(using a video capture card)

"Liesgang diatv" automatic slide viewer with built in high quality colour TV camera. It has a composite video output to a phono plug (SCART & BNC adaptors are available). They are in very good condition with few signs of use. For further details see www.diatv.co.uk .....£91.91+ vat = £108.00

Board cameras all with 512x582 pixels 8.5mm 1/3 inch sensor and composite video out. All need to be housed in your own enclosure and have fragile exposed surface mount parts. They all require a power supply of between 10 and 12v DC 150mA.

47MIR size 60x36x27mm with 6 infra red LEDs (gives the same illumination as a small torch but is not visible to the human eye).....£37.00 + vat = £43.48

30MP size 32x32x14mm spy camera with a fixed focus pin hole lens for hiding behind a very small hole.....£35.00 + vat = £41.13

40MC size 39x38x27mm camera for 'C' mount lens these give a much sharper image than with the smaller lenses.....£32.00 + vat = £37.60

Economy C mount lenses all fixed focus & fixed iris

VSL1220F 12mm F1.6 12x15 degrees viewing angle.....£15.97 + vat = £18.76
VSL4022F 4mm F1.22 63x47 degrees viewing angle.....£17.65 + vat = £20.74
VSL6022F 6mm F1.22 42x32 degrees viewing angle.....£19.05 + vat = £22.38
VSL8020F 8mm F1.22 32x24 degrees viewing angle.....£19.90 + vat = £23.38

Better quality C Mount lenses

VSL1614F 16mm F1.6 30x24 degrees viewing angle.....£26.43 + vat = £31.06
VWL813M 8mm F1.3 with iris 56x42 degrees viewing angle.....£77.45 + vat = £91.00

1206 surface mount resistors E12 values 10 ohm to 1M ohm 100 of 1 value £1.00 + vat 1000 of 1 value £5.00 + vat

866 battery pack originally intended to be used with an orbitel mobile telephone it contains 10 1.6Ah sub C batteries (42x22dia the size usually used in cordless screwdrivers etc.) the pack is new and unused and can be broken open quite easily..... £7.46+vat = £8.77

Please add 1.66 + vat = £1.95 postage & packing per order

JPG ELECTRONICS
Shaws Row, Old Road, Chesterfield, S40 2RB
Tel 01246 211202 Fax 01246 550959 Mastercard/Visa/Switch
Callers welcome 9:30 a.m .to 5:30 p.m. Monday to Saturday

Easy-PC for Windows

World Beating Value in PCB Design Software

from £97

High performance Windows based PCB Design Capture, Simulation and Layout software at prices you'd expect from your local computer store!

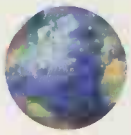

Designed for Microsoft® Windows®XP 2000, ME, 98 Windows NT®

NEW! in Easy-PC 7
- Library Databook
- Step and repeat plotting
- Swap Connection Mode
- Dimensioning
- Copy to Metafile

plus much more.....

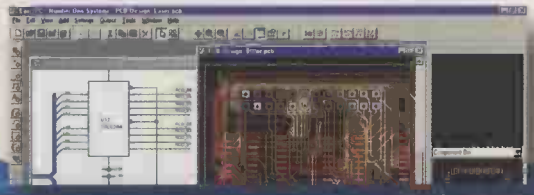

Stop press... by customer demand, now with Tsien Boardmaker 2 design import...

Number One Systems delivers true 32 bit Windows software applications including features that a few short years ago would only have been available in software tools priced in the thousands!

Test drive Easy-PC and Easy-Spice for yourself and be prepared to be amazed at the super value...

Call for a brochure, price list and demo CD on +44 (0)1684 773662 or email sales@numberone.com

No1 Number One Systems
Number One Systems
Oak Lane, Bredon
Tewkesbury, Glos GL20 7LR
United Kingdom

or download from
www.numberone.com

Please quote *Electronics World* when seeking further information

GPS receiver first to be offered Bluetooth technology

CSR (Cambridge Silicon Radio) today announced that its BlueCore Bluetooth® silicon has been selected by Navman, a leader in mobile GPS navigation, for its Navman GPS 4400 in-vehicle system. The Bluetooth wireless connection, made possible with CSR's BlueCore in the Navman GPS 4400, turns a Pocket PC PDA into a navigation system which will issue voice commands. The easy to use in-car Navman system makes use of satellite location technology (GPS) to pinpoint your location and then issues precise directions throughout the journey using voice commands. Voice technology is made possible by the supplied SmartST™ Professional Voice Navigation software. Navman GPS 4400 is available now from high-street or online retailers for approximately £380.

The GPS 4400 receiver is Navman's first to be offered with Bluetooth wireless technology and, similar to Navman's other GPS receivers, offers navigational accuracy within a tolerance of 5 metres. The Bluetooth link will allow the GPS receiver to communicate wirelessly with a Pocket PC PDA which provides the user interface.

The Navman SmartST software will work on any Pocket PC 2002 or 2003 system with embedded Bluetooth wireless technology. The supplied vehicle windshield mount combined with Bluetooth wireless connectivity allows the GPS receiver to be mounted on the front or rear windshield. CSR's BlueCore Class 2 Bluetooth device will provide a wireless connection between the GPS receiver and PDA up to a range of 10 metres - permitting convenient location of the receiver and PDA. A fully mobile system, the Navman GPS 4400 is also designed to be easily transferred from vehicle to vehicle unlike fully embedded in-vehicle systems.

The low power consumption of CSR's BlueCore ensures that battery life in the GPS 4400 is maximised which means three AAA batteries can power the unit for up to 30 hours.

For even longer trips, the Navman GPS 4400 can be powered using a vehicle's 12V cigarette lighter via the vehicle power adaptor cable.

Cambridge Silicon Radio
www.csr.com

40W DC-DC converter delivers higher output over wider temperature range

Lambda has unveiled a new 40W addition to its UX series of industry standard 2 x 1 sized DC-DC converters. The UX40 is ideally suited to distributed power architectures, either used on its own or as an extremely cost efficient solution when coupled with a point of load DC-DC converter. suitable for a wide range of telecom, IT and industrial applications it allows designers to take full advantage of forced-air cooling to achieve higher output current over a wider temperature range.

With an 89% rating at ambient temperature, and a switching frequency at 265kHz, it has an operating input voltage of 48V nominal over a 36-75VDC range and has a single 3.3V output. With convection cooling the 3.3V UX40 provides a maximum output current of 7.5A up to 50ºC. Applying forced-air cooling at the rate of 1.5m/s to the same device allows the designer to achieve a maximum output current of 12.0A right up to 70ºC.

Lambda can offer low minimum order quantities, ideal for prototyping and pre-production designs. Samples can be delivered within one week of order and volume quantities can be supplied in under four weeks.

All versions of Lambda's UX series of DC-DC converters are CE marked and UL, CSA and VDE compliant.

www.lambda-gb.com

Co-solvent cleaning system increases productivity

Contract manufacturing specialist JJS Electronics has increased productivity and improved cleaning quality after installing a co-solvent cleaning system from Kerry Ultrasonics.

The Microsolve M450C removes post-reflow flux, post-wave flux and hand soldering residues from surface-mounted and conventional boards destined for military and commercial use, previously cleaned using 141B, an ozone-depleting substance and unable to guarantee military standards of cleanliness.

The four-stage process uses an ultrasonic frequency of 70kHz in both cleaning and rinse stages, thereby safeguarding delicate boards while maintaining high-level cleaning performance.

The final two stages comprise a vapour rinse and a freeboard dry.

Kerry
www.kerry.co.uk

Please quote *Electronics World* when seeking further information

Free software package for education from CMS

Cambridge Microprocessor Systems (CMS) has introduced a new, low cost software and hardware package that enables educational establishments to provide a group of students free access to industrial application programming tools. Educational establishments are able to make unlimited copies of the royalty-free development tools for a one off payment of £495.

The easy-to-use package which allows the student to develop application software, consists of a QF-200 embedded controller, onboard operating system, power supply and interface cable, for £95. The package is ideal for students to experience both writing software and working with electronic hardware.

CMS
www.cms.uk.com

Schematic-driven layout package boosts IC design productivity in PC-based tool

Tanner EDA has announced a schematic-driven layout (SDL) package as an option for its popular L-Edit V10.2, analogue and mixed signal layout and verification software. This is the first time that connectivity information has been introduced within the layout domain in a low-cost, PC-based tool.

L-Edit/SDL enables IC designers to retain the electrical connectivity information from schematics and systematically display this in design layouts. To achieve this, the tool takes industry-standard SPICE or CDL netlists into L-Edit and displays them in a browser window. It creates all primitive layout blocks using parameters from the netlist and displays fly line connectivity between selected nodes.

L-Edit/SDL automatically highlights changes if a modified netlist is imported, showing where devices or connections have been added or removed. This is particularly useful in minimising the time and effort needed to manage engineering change orders (ECOs). The tool automatically regenerates devices if their parameters have changed and all existing placement is preserved between change orders.

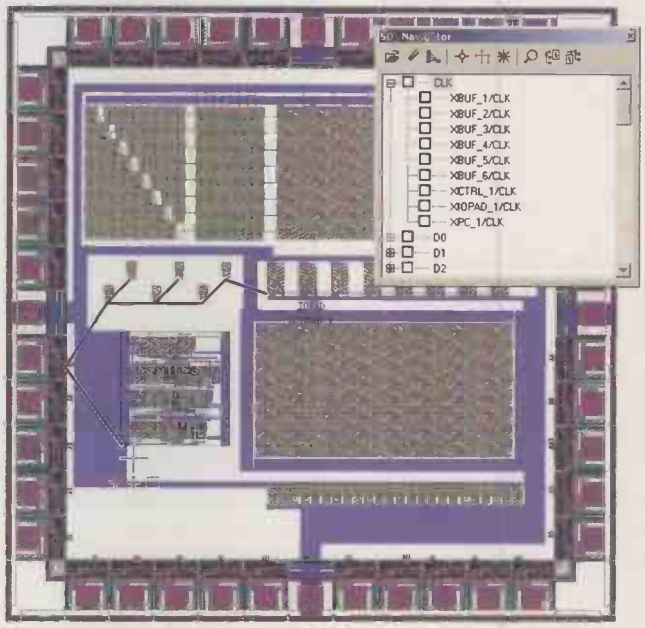

L-Edit/SDL net list navigator with layout view showing fly line connectivity of a selected node.

Productivity is further enhanced in L-Edit/SDL by the use of parameterisable cells for automatic generation and editing of layout devices using familiar C-code macros.

Available in Europe exclusively from EDA Solutions, L-Edit/SDL is offered as a complete tool suite or as an upgrade option for existing L-Edit users. Support is provided for Windows® XP, 2000, NT and 98/ME platforms.

EDA solutions
www.eda-solutions.com

Sounding out the automotive sector

Just announced by Murata is a new Piezo Sounder device that is more than 40% smaller than its predecessor. Measuring just 12 x 12 x 3mm, the device has an operating temperature range of –40ºC to +85ºC, making it ideal for a range of applications in the automotive industry.

The PKLCS1212E40A1-R1 is specified with a sound pressure level of 75dBm minimum, at 4kHz/3V peak to peak square wave at 10cm. Maximum input voltage is 25V peak to peak.

Although electrically equivalent to its predecessor, the new Piezo Sounder is considerably more rugged in terms of operating and storage temperature, resistance to humidity, dry heat and thermal shock.

Further, the devices are supplied on tape and reel for automated assembly, and they are resistant to reflow soldering.

For companies aiming to meet upcoming environmental legislation, Murata's Piezo Sounder is manufactured with gold flash electrodes for lead-free conductive glue mounting.

Murata Electronics (UK) Ltd
www.murata-europe.com

Mosfet is fully protected

Zetex has released the first fully self-protected Mosfet device from its IntelliFET low-side array based platform integrating a configurable component array with a vertical power transistor on the same die. The 60V 550mΩ N-channel BSP75G is protected against over temperature, over current, over voltage and ESD. The Mosfet offers logic level input control and will auto restart on removal of any fault type.

At a preset chip temperature of around 175°C, the device will shutdown and a 550mJ active clamp will turn the device off before it goes into avalanche breakdown. Its over current limit allows it to handle a continuous current of 1.6A. Internal bi-directional diodes provide human body ESD protection.

The BSP75G will switch all types of resistive, inductive and capacitive loads and acts as a MCU-compatible power switch in 12V and 24V circuits.

Zetex
www.zetex.com

Data Not Easily Accessible?

Radio Data Transfer From XL Systems..... Don't make a mountain out of it!

Your data is here

remote process control, telemetry & alarm monitoring .. .. simple & straight forward wireless solutions!

WWW.XLS.CO.UK
Tel 01883 622778
Sales@xls.co.uk

XL Systems Ltd

Active Loudspeaker Kit

Originally featured in Electronics World, this Jeff Macaulay designed motional feedback active loudspeaker system has generated a great deal of interest from both electronics and loudspeaker hobbyists alike.
We are pleased to be able to offer all the drive units plus the amplifier component kit at this new reduced price for a limited period while stocks last.

SPECIAL OFFER PRICES £350 inc. VAT
(normal price £450 inc. VAT).
Limited stocks available.

We also have a comprehensive range of drive units, components, capacitors (Ansar, SCR & Hovland), inductors, cable, damping and grille materials all available from stock.
The UK's largest supplier of kit loudspeakers - all on demonstration.
Phone today for your *FREE* catalogue or check out our Website.

WILMSLOW AUDIO
50 Main Street, Broughton Astley, Leicester LE9 6RD.
Tel: 01455 286603 Fax: 01455 286605
Website: www.wilmslowaudio.com

PCB-POOL®

SERVICING YOUR COMPLETE PROTOTYPE NEEDS

- Prototypes at a fraction of the cost
- Tooling and setup included
- Any contour
- Fr4 1.6mm, 35µm Cu
- Industry standard quality
- Follow up series runs
- CAM / CAD consulting

PRICE EXAMPLE
1 EUROCARD DS/PTH
+ Tooling
+ Photoplots
+ VAT
= £ 29.89*
*Sterling rates may vary. Price = €49

€49

FREE with first order (while stocks last)

may differ slightly to model shown

Tel: +353 (0)61 701170
Fax: +353 (0)61 701164
E-Mail: sales@beta-layout.com

Freephone 0800-389 8560

Simply send your files and order ONLINE:
WWW.PCB-POOL.COM

Protel orcad EDWIN GraphiCode

EW

Absolute High End Class D Amplifier

Can be used as a stand alone monoblock amplifier or fitted into existing loudspeakers to make them active

- *Compact design due to switch mode P.S.U.*
- *90% Efficient high switching frequency*
- *Small size, fits in a 110mm x 92mm opening*
- *Neutrik® Combi input balanced / unbalanced*
- *Output fully protected*
- *Status LEDS - Presence / Clip / Protect*
- *600W / 2 Ohm - 500W / 4 Ohm - 300W / 8 Ohm*
- *All powers in R.M.S.*
- *Volume control. Input sensitivity 775mV*
- *Freq. Response 2Hz-20kHz*
- *Light weight 3kg*
- *Stunning performance*

For further information please look at our website at www.bkelec.com and click on the modules and hybrids button

Special quantity pricing and customised artwork for OEM's.

Price £281.12 Inc Vat Each or £499.00 Per Pair when quoting this advert
Carriage UK Mainland Only £8.00

VISA

B.K. Electronics
Unit 1, Comet Way, Southend-On-Sea. Essex SS2 6TR
Tel:- 01702 527572 Fax:- 01702 420243
Web:- www.bkelec.com - email:- sales@bkelec.com

Please quote *Electronics World* when seeking further information

FireWire audio chip creates high quality sound systems

A dedicated FireWire audio controller IC has been launched by Oxford Semiconductor. Compatible with FireWire (IEEE1394A) and FireWire 800 (IEEE1394B) connections, the OXFW970 chip provides eight digital audio output channels. Enabling the creation of high quality surround sound systems for both Mac and PC platforms, the OXFW970 uses the bandwidth and quality of service attributes of FireWire to overcome the limitations of alternative USB multi-channel audio solutions and removes the need to install separate sound cards.

The FireWire audio controller can receive and process 32-bit audio data sampled at up to 48kHz at a streaming speed of up to 100Mbytes/sec. FireWire's power carrying capability also means that the speaker

configuration does not require the use of external power supplies.

Via an external 1394 PHY, the OXFW970 accepts isochronous audio packets encoded using the IEC61883-6 transmission protocol, initiates buffering and sample rate control before passing them to the multiple serial audio interfaces and conventional DAC output stage.

A highly integrated device presented in a 100-pin TQFP package, the FireWire audio controller IC uses a combination of its on-board ARM7TDMI processor and high performance buffer manager to implement the 1394 transaction layer. Its link controller complies with IEEE1394-1995, 1394a and 1394b specifications.

The OXFW970 supports remote programming of 512kbits of on-board flash memory over the FireWire bus using firmware and flash programming ultilities supplied by Oxford Semiconductor. Integral UART and JTAG ports facilitate debugging. The chip offers eight programmable GPIO pins for the addition of application specific functionality.

Oxford Semiconductor Ltd
www.oxsemi.com

AC-DC supplies for industrial control

Lambda has added 100W and 180W models to its Pb-free DLP series of DIN-rail mounted AC-DC supplies, covering 75 to 240W and aimed at applications such as factory automation, industrial control and test and measurement equipment. Input voltage is 85-265V AC (47-63Hz) for both 100W and 180W units, with the additional option of 120-370v DC on the DLP180-24-1/E. Output voltage for all models is 24V. Output current is 4.1A for the DLP100-24-1/E and 7.5A for the larger DLP180-24-1/E. Maximum efficiency is 87 per cent, and power density is up to 0.21W/cm3. The units have a common height and depth of 97x110mm with the 100W unit 60mm wide and 540g in weight and the 180W unit 80mm wide and 780g.

Built-in over-current and over-voltage protection is included and a red alarm LED warns when the output drops below 20V. Convection cooling is employed over an operating temperature range of –10 to +50°C at full load, derating to 60 per cent at +60°C.

Lambda
www.lambda-gb.com

Single output supplies have integrated protective circuitry

Ultimate Renaissance has introduced two single output power supplies which combine active power factor correction with integrated remote sense, power fail and remote inhibit functions.

Delivering total power of between 80W and 130W, the Astec LPS125/28 supplies have a built-in EMI filter and comply with IEC EN61000-3-2 specifications. The power supplies feature single wire current sharing for N+1 redundant operation, overvoltage protection up to 35 per cent above nominal output, and overload protection up to 135 per cent above peak. Output voltage for the LPS 125 is rated at 24V, while the LPS128 is rated at 48V. Additional features include a 5V standby output and a 12V fan output. Input voltage range is from 85Vac to 264Vac or 120Vdc to 300Vdc. Full load efficiency is rated at 80 per cent. Maximum inrush current is 40A and output ripple is down to 240mV.

Typical power factor is 0.99 and leakage current is 0.5A at 50/60Hz with a 264Vac input. Supplied in a 127.0x76.2x32.8mm housing, the supplies have an operating temperature range of 0 to 50°C.

Ultimate Renaissance
www.ur-home.com

Rotary packet switches suited to heavy industrial equipment

Now available from Aerco are high power, rotary packet switches from Santon Switchgear, ideally suited for heavy industrial applications such as railways and military equipment.

These manually operated rotary switches are used for isolation, changing over and selection of all types of high power electrical circuits.

They have self-cleaning, wiping action clip and blade contacts that give excellent electrical continuity and are shock and vibration proof.

Standard products are rated at 16 to 1,000A at 440V AC and 250V DC IEC947-3, but custom-built switches of higher ratings can be produced to meet individual specifications.

Santon rotary packet switches are used in many areas but are ideally suited to heavy industry where quality and reliability are paramount.

They have been used as battery isolator switches on trains, have been specified on the three Astute submarines being built by BAE Systems in Barrow-in-Furness and used in steel works, quarries and cement works where isolation in dusty, dirty, aggressive environments is highly important.

Aerco Ltd
www.areco.co.uk

Please quote *Electronics World* when seeking further information

Piezo switches confound vandals

Schurter's Metal Line range of Piezo Switches has been expanded with two new types designed to provide extended protection against vandalism.

The PSE H1 M22 and PSE H1 M27 are completely sealed switches made from high grade stainless steel. They are particularly suited to robust applications in outdoor and harsh environments such as door opener devices for public transport and urban housing, pedestrian traffic lights and public information terminals.

The high impact Piezo Switches have no moving parts and the electronics are securely encapsulated to IP67 specifications. In addition, they offer a higher impact resistance to IK06, meeting EN50102 standards. The Piezo mechanism further ensures long-life expectancy, and these switches are expected to operate effectively for 20million actuations.

The PSE HI switches are supplied in 22mm and 27mm mounting diameters and prolonged signal versions are also available.

Operating from either AC (42V maximum) or DC (60V maximum) voltages, the switches have a minimum actuating force of 1.5 to 3N, contact travel of 0.002mm and maximum torque 250Ncm. Maximum switching current for the standard switches is 100mA with a maximum breaking capacity of 1W, while the prolonged signal versions are specified at 2.6A and 15.6W respectively. Operating temperature range is from –20ºC to +60ºC.

The actuating surface of the switches can be laser engraved with legends in a range of standard typefaces, and customer specific typefaces and symbols are also available.

Schurter Electronic Components
www.schurter.com

Super-fast debugging for all PowerPC processors

Now available in the UK from Computer Solutions, the Abatron bdiGDB is a high-speed embedded debugging tool which supports all currently available PowerPC processors including Motorola MPC5200, 744x/5x, 8270/75/80 and PowerQUICC III (MPC85xx as well as IBM 440GX, 6xx and 7xx.

Because the new unit uses a powerful Ethernet connected BDM/JTAG interface to communicate with the target and run the GNU debugger (GDB), it does not take up the serial interface frequently used by GDB monitors – nor does it require the expensive chip connectors used for in-circuit emulation.

The Ethernet interface provides a very fast download speed (up to 320kbyte/s depending on the PPC), without the need for the target system to have a debugged board with Ethernet port and supporting software.

The bdiGDB allows the user to set breakpoints, undertake single-step execution, and examine and set memory locations and registers. Via GDB it can disassemble machine code or be used to debug C, C++, JAVA, Pascal and Fortran.

The Abatron provides support for the CPU's internal break registers for debugging code running in ROM or flash memory, while for users developing Linux kernels it will work with memory management units.

GDB normally assumes that all memory is in RAM, but the Abatron has the ability to debug and program on-chip flash areas and most popular off-chip flash devices as part of the GDB's operation. Concurrent debugging of multiple CPUs on the same JTAG chain can take place for the Xscale, Xilinx and PPC4xx.

Windows 95/98, 2000, ME, NT and XP, as well as Unix and Linux hosts, are all supported.

Computer Solutions Ltd
www.computer-solutions.co.uk

Audio subsystem integrates amplifiers and volume controls

National Semiconductor has introduced a Boomer audio subsystem for mobile phones that integrates amplifiers, volume and mixing controls and 3D sound in a miniature micro SMD package.

The LM4857 integrates stereo speaker drivers for the handset with 495mW output power per channel, a 33mW stereo headphone driver with 32-step volume control and independent left, right and mono volume controls. It combines a stereo speaker amplifier, a mono earpiece amplifier delivering 43mW into a 32Ω load, and a line output for an externally powered hands-free speaker.

The device's 3D enhancement improves stereo channel separation when the left and right speakers are too close together. It also routes and mixes the stereo and mono inputs into 16 distinct output modes. The LM4857 is controlled through an 12C compatible interface and is available in a 30-bump micro SMD package.

National Semiconductor
www.national.com

Please quote *Electronics World* when seeking further information

Dial Electronics gets complete makeover

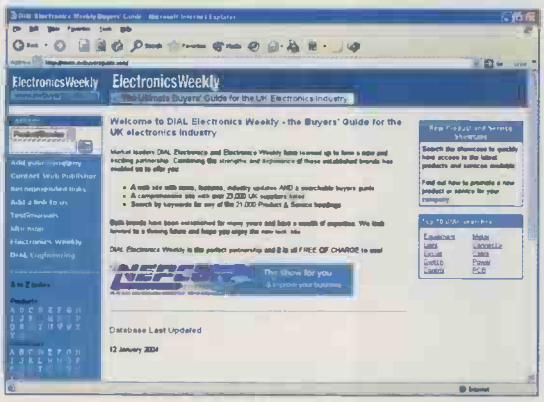

Dial Electronics, the business directory for the UK electronics industry, has been re-launched following a major expansion and is being renamed Electronics Weekly Buyers' Guide, in partnership with the journal Electronics Weekly.

Available annually in either a book format or on a CD Rom, it is also available online as a search engine - containing complete details of over 23,000 electronics companies in the UK. This means that, in all, it can provide information about 21,000 different electronics-related products and services from 'Accelerometer Accessories' to 'Zener Diodes'. By far the most popular version of the directory is the search engine, which can be found at www.ewbuyersguide.com. It is updated on a regular basis and, like Dial Electronics, remains free to use without the hassle of any online registration. The latest figures show that 475,000 searches a month are being actioned on behalf of people looking for specific companies, products/services or entries in the directory from within certain towns/postcodes. This figure has risen dramatically from just 6,000 searches a month when the Dial Electronics website was first introduced in June 2002.

Other new developments include a 'Showcase' section, which acts as a shop window for those companies wishing to upgrade their free entry to a more prominent advertisement.

For more information, log on to www.ewbuyersguide.com or call the information line on 01342 332121.

New Brochure

WCN Supplies, purveyors of surplus, new and 'previously enjoyed' components have announced the availability of their new 2004 brochure. The product range been updated with loads of new electronics, modeller and hobbyist items. The new 20 page A4 brochure is available by contacting WCN or by browsing their new web site.

www.wcnsupplies.net

SPECIAL OFFERS

TEKTRONIX 2445A 4 Ch 150MHz Delay, Cursors etc. Supplied with 2 Tektronix probes — ONLY £425

TEKTRONIX 2232 Digital Storage Scope. Dual Trace 100 MHz,100m/s with probes. £525
H.P. 54501A Digitizing Oscilloscope100MHz, 4Ch £425
CIRRUS CRL254 Sound Level Meter with Calibrator, 80-120dB, LEQ £95
BECKMAN HD110 Handheld 3½ digit DMM, 28 ranges with battery, leads and carrying case £30
WAYNE KERR B424 Component Bridge £50
RACAL 9300 True RMS Voltmeter 5Hz-20MHz usable to 60MHZ 10V-316V £50
RACAL 9300B as above £75

H.P. 3312A Function Gen 0.1Hz-13MHz AM/FM Sweep/Tri/Gata/Burst etc £300
FARNELL AMM255 Automatic Mod Meter 1.5MHz-2GHz Unused £300
FARNELL DSG1 Low Frequency Syn Sig Gen 0.001Hz to 99.99kHz, Low Distortion TTL/Square/Pulse Outputs etc £95
FLUKE 8060A Handheld True RMS DMM 4½ [illegible]
H.P. 3310A Funct[illegible] Sine/Sq/Tri/Ramp/Pulse £125
FARNELL FLM4 Sine/S[illegible]cilla[illegible]MHz low distortion. TTL Output. Am[illegible] £125
H.P. 545A Logic Probe [illegible] 546A Logic Pulser and 547A Current Tracer £90
FLUKE 77 Multimeter 3½ digit Handheld £60
FLUKE 77 SERIES II £70
HEME 1000 LCD Clam[illegible]ter [illegible] carrying Case £60

Racal 9008 Automatic Modulation Me[illegible] AM/FM 1.5MHz - 2GHz — ONLY £95

Datron 1061A High Quality 6½ digit Bench Multimeter True RMS/4 wire/Current Converter — £225

BLACK STAR ORION PAL/TV Colour Pattern Generator ....from £75-£125
THURLBY/THANDER TG210 Function Generator, 0.002Hz-2MHz, TTL etc ....£80-£95
THURNLY THANDAR P.S.U. PL320QMD, 0V-32V, 0A-2A Twice (late colours) £200

JUST IN

HP. 8640A Signal Generator AM/FM 500KHz-512MHz £250
KENWOOD CS4025 Oscilloscope Dual Trace 20MHz £125
LEADER LB0523 Oscilloscope Dual Trace 35MHz £140
GOULD OS300 Oscilloscope Dual Trace 20MHz £95
NATIONAL PANASONIC VP7705A Distortion Analyser £125
KENWOOD VT176 Millivoltmeer 2 Channel £50
KENWOOD FL140 Wow & Flutter Meter £50
KENWOOD FL180A Wow & Flutter Meter Used ....£75 Unused £125
BIRD 43 Watt Meter £75
Elements for the above £25

MARCONI 893C AF Power Meter, Sinad Measurement. ....Unused £100 Used £60
MARCONI 2610 True RMS Voltmeter Autorangin 5Hz-25MHz £195
GOULD J3B Sine/Sq Osc. 10Hz-100kHz. Low distortion ....£75-£125
AVO 8 Mk6 in Ever Ready Case, with leads etc £80
Others Avos ....from £50
GOODWILL GVT427 Dual Ch AC Millivoltmeter 10mV in 12 Ranges Freq 10Hz-1MHz ....[illegible]
SOLARTRON 7150 DMM 6½ digit Tru[illegible] ....[illegible]
SOLARTRO[illegible]150 PLUS £200
[illegible]LITY RAC[illegible]TERS
990[illegible]Counter, 50MHz £50
9[illegible] Counter [illegible]MHz £75
[illegible]Counter, 10Hz-560MHz, 9-digit £50
[illegible]M 9343M, LCR Databrid[illegible] Automeasurements of [illegible]D £200
HUNTRON [illegible] £125
MARC[illegible] AM [illegible]n, 10-520MHz £75
Po[illegible] Tester [illegible]
FARNELL AP60/[illegible] £2000
FARNELL AP100[illegible] £2000
H.P. 6012B DC P[illegible], 0-50A 1000W £1000
FARNELL AP60/50 1KW Autoranging £1000
FARNELL H60-/50 0-60V 0-50A £750
FARNELL H60/25 0-60V; 0-25A £400
Power Supply HPS3010 0-30V; 0-10A £140
FARNELL Dual PSU XA35-2T 0-35V 0-2A Twice QMD LCD Display £180
FARNELL L30-2 0-30V; 0-2A £80
FARNELL L30-1 0-30V; 0-1A £60
Many other Power Supplies available.
Isolating Transformer 240V In/Out 500VA £40

FARNELL DTV 12-14 OSCILLOSCOPE DUAL TRACE 12 MHz TV. COUPLING — ONLY £75

FARNELL LFI 12-14 Sine/Sq OSCILLATOR 10 MHz – 1 MHz — ONLY £75

OSCILLOSCOPES

TEKTRONIX TDS350 Dual Trace 200MHz 1G/S unused £1500
TEKTRONIX TDS320 Dual Trace 100MHz 500M/S £1200
TEKTRONIX TDS310 Dual Trace 50MHz 200M/S £950
LECROY 9400A Dual Trace 175MHz SG/S £750
HITACHI VC6523 Dual Trace 20MHz 20M/S unused £500
PHILIPS PM3092 2+2Ch 200MHz Delay ....£800 As [illegible]
PHILIPS PM3082 2+2Ch 100MH[illegible]
TEKTRONIX TA[illegible] Dual [illegible]
TEKTRON[illegible] 4Ch [illegible]rs etc £1500
TE[illegible] Ch [illegible] Delay [illegible] cursors etc £900
TE[illegible] Dig[illegible] Dual Trace 100MHz Delay £450
TEKTR[illegible] Analogue Storage Dual Trace 100MH[illegible] £250
TEKTRONIX 485 Dual Trace 350MH[illegible] ....[illegible]
TEKTRONIX 475 Dual Trace 200[illegible] Sweep ....[illegible]
TEKTRONIX [illegible]B Dual [illegible] £325
TEKTRONIX 2[illegible] Du[illegible] Sweep £250
PHILIPS P[illegible] TB/Delay Autoset £375
[illegible]M305[illegible] 60 MHz Dual TB/De[illegible] Autoset £275
PH[illegible]3217 Dual Trace 50MHz De[illegible] £250
[illegible]D OS1100 Dual Trace 30MHz [illegible]
HAMEG HM303.6 Dual [illegible] Component Tester. As new £240
HAMEG HM3[illegible] 30[illegible]Hz Component Teste[illegible] £200
[illegible] AVAILABLE

W[illegible] Freq Synthesizer 6747A-20 10MHz-20GHz £5000
[illegible]RCONI 2022E Synthesised AM/FM Sig Gen £525 - £750 [illegible]0KHz - 1.01GHz LCD Display etc
H.P. 8657A Syn 100KHz - 1040MHz Sig Gen £2000
H.P. 8656B Syn 100KHz - 890MHz Sig Gen £1350
H.P. 8656A Syn 100KHz - 990 MHz Sig Gen £995
R&S APN62 Syn 1Hz - 260KHz Sig Gen ....£425 Balanced/Unbalanced Output LCD Display
PHILIPS PM5328 Sig Gen 100KHz - 180MHz with 200MHz Freq Counter IEEE £550
RACAL 9081 Syn AM/FM Sig Gen 5MHz - 520MHz £250
H.P. 3325A Syn Function Gen 21MHz £600
MARCONI 6500 Amplitude Analyser £1500
H.P. 4192A Impedence Analyser £5000
H.P. 4275A LCR Meter 10KHz - 10MHz £2750
H.P. 8903A Distortion Analyser £1000
WAYNE KERR Inductance Analyser 3245 ....£2000
H.P. 8112A Pulse Generator 50MHz £1250
MARCONI 2440 Freq Counter 20GHz £1000
H.P. 5350B Freq Counter 20GHz £2000
H.P. 5342A 10Hz - 18GHz Freq Counter £800
H.P. 1650B Logic Analyser 80 Channel £1000
MARCONI 2305 Mod Meter 500KHz - 2Ghz £750

JUST IN

H.P. 66312A PSU 0 - 20V/0-2A £400
H.P. 66311B PSU 0 - 15V/0-3A £400
H.P. 66309D PSU Dual 0 - 15V 0-3A/0-12V 0-1.5A £750
H.P. 6632B PSU 0 - 20V/0-5A £500
H.P. 6623A PSU Triple Output ranging from 0-7V 0-5A to 0-20V 0-4A £850
H.P./Agilent 34401A DMM 6½ digit ....£400/£450
H.P. 3478A DMM 5½ digit £275
FLUKE 45 DMM Dual Display £400
KEITHLEY 2010 DMM 7½ digit £950
KEITHLEY 617 Programmable Electrometer £1250
H.P. 4338[illegible]hmmeter £1500
[illegible] 1999 2.6 GHz £500
[illegible] 3131A 3GHz £850
H.P./Agile[illegible]0A Function Gen/ARB ....£900/£1000 [illegible]Hz - 15MHz
SONY/TEKTRONIX AFG32[illegible]itary Function Gen £1250
H.P. 8904A Syn Func[illegible]C - 600KHz £1000/£1250
BLACK STAR [illegible] Function Gen 0.2Hz - 2MHz with Freq[illegible] £140
[illegible]16[illegible] Pulse [illegible] 1mH-50MHz £1950
[illegible]76[illegible] Signal Gen 0.1-2080MHz £2500
[illegible] SWITCH 1.5GHz £40
[illegible] CABLES £10

SPECTRUM ANALYSERS

H.P. 8561B 50Hz - 6.5GHz £5000
H.P. 8560A 50Hz - 2.9GHz Synthesised £5000
H.P. 8594E 9KHz - 2.9GHz £4500
H.P. 8591E 1MHz - 1.8GHz 75 ohm £2750
H.P. 853A with 8559A 100KHz - 21GHz £1750
H.P. 8558B with Main Frame 100KHz - 1500MHz £750
H.P. 3585A 20Hz - 40MHz £2500
H.P. 3580A 5Hz - 50KHz £600
ADVANTEST R4131B 10KHz - 3.5GHz £2750
EATON/Alltech 757 0.001 - 22GHz £750
MARCONI 2382 100Hz - 400MHz High Res £2000
MARCONI 2370 30Hz - 110MHz ....from £500
H.P. 182 with 8557 10KHz - 350MHz £500
H.P. 141T Systems
8553 1KHz - 110MHz £500
8554 500KHz - 1250MHz £750
8555 10MHz - 18GHz £1000
H.P. 8443 Tracking Gen/Counter 110MHz £250
H.P. 8444 Opt 059 ....£750
B & K 2033R Signal Analyser £650
H.P. 8754A Network Analyser 4MHz - 1300MHz £1250
H.P. 3577A Network Analyser 5Hz - 200MHz £3000
H.P. 53310A Modulation Domain Analyser Opt 001/003 ....£5000
ONO SOKKI Portable FFT Analyser £1500
H.P. 8720C Microwave Network Analyser 50MHz-20GHz £12500

RADIO COMMUNICATONS TEST SETS
MARCONI 2955/2955R ....from £1000
Rohde & Schwarz CMT 0.1 - 1000MHz £1500
Schlumberger 4040 ....£750

Check our Website for latest prices and equipment

STEWART OF READING
110 WYKEHAM ROAD, READING, BERKS RG6 1PL
Telephone: (0118) 9268041 Fax: (0118) 9351696
www.stewart-of-reading.co.uk
Callers welcome 9am-5.30pm Monday to Friday (other times by arrangement)

USED EQUIPMENT - GUARANTEED. Manuals supplied.
This is a VERY SMALL SAMPLE OF STOCK. SAE or telephone for lists. Please check availability before ordering. CARRIAGE all units £16. VAT to be added to total of goods and carriage.

Electronics World reader offer: x1, x10 switchable oscilloscope probes, only £21.74 a pair, fully inclusive*

*Additional pairs as part of the same order, only £19.24 each pair.

Seen on sale for £20 *each*, these high-quality oscilloscope probe sets comprise:

- two x1, x10 switchable probe bodies
- two insulating tips
- two IC tips and two sprung hooks
- trimming tools

There's also two BNC adaptors for using the cables as 1.5m-long BNC-to-BNC links. Each probe has its own storage wallet.

To order your pair of probes, send the coupon together with £21.74 UK/Europe to ***Probe Offer, Caroline Fisher, Highbury Business Communications, Nexus House, Azalea Drive, BR8 8HU***

Readers outside Europe, please add £2.50 to your order.

Please supply the following:

Probes

Total_____

Name _____

Address _____

_____

_____

Postcode _____ Telephone _____

Method of payment *(please circle)*

Cheques should be made payable to Electronics World

Access/Mastercard/Visa/Cheque/PO

Credit card no_____

Card expiry date Signed

Please allow up to 28 days for delivery

Specifications

Switch position 1

Bandwidth	DC to 10MHz
Input resistance	1MΩ – i.e. oscilloscope i/p
Input capacitance	40pF+oscilloscope capacitance
Working voltage	600V DC or pk-pk AC

Switch position 2

Bandwidth	DC to 150MHz
Rise time	2.4ns
Input resistance	10MΩ ±1% if oscilloscope i/p is 1MΩ
Input capacitance	12pF if oscilloscope i/p is 20pF
Compensation range	10-60pF
Working voltage	600V DC or pk-pk AC

Switch position 'Ref'

Probe tip grounded via 9MΩ, scope i/p grounded

Capacitance meter

The measurements of potential difference and current flow present few problems; the same cannot be said for capacitance. Even today when most modern digital multi-meters have a capacitance scale, it is usually limited to a maximum of 20 microfarads and exhibits poor accuracy at both the high and low ends. In this article David Ponting describes a practical capacitance meter with everything you need to build one.

In contrast, the meter described in this article precisely determines a component's capacitance from a few picofarads to 10,000 microfarads (and more) in three scales: 10 nanofarads, 10 microfarads and 10,000 microfarads. It automatically measures high value capacitors at the low frequencies they are likely to encounter when used as reservoirs for DC smoothing, while the meter's own stray capacitance (an unwanted parameter which is always a problem when trying to measure picofarads), only modifies, but does not limit, the method of determining small values. The finished meter will accurately measure all types of capacitor.

A little theory

Figure 1 shows how an oscillator can be made from three building blocks: an inverter, a resistor R and a capacitor C. The approximate time for one wavelength of such an oscillator is given by the formula: T = 1.1CR. In other words with R constant, T and C are directly proportional: the period of one wavelength is doubled if C is doubled, halved if C is halved, and so on.

This design employs two of these oscillators. The first, X, uses some convenient value for resistor R together with a particular capacitor correctly marked as 1 nanofarad. The second oscillator, Y, uses values of R and C which result in its producing 1000Hz while X is generating just 1 wavelength. A frequency counter counting Y can be started and stopped by the beginning and end transitions of the 1Hz of X. During this period the counter will of course

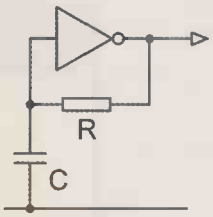

Figure 1: RC Oscillator

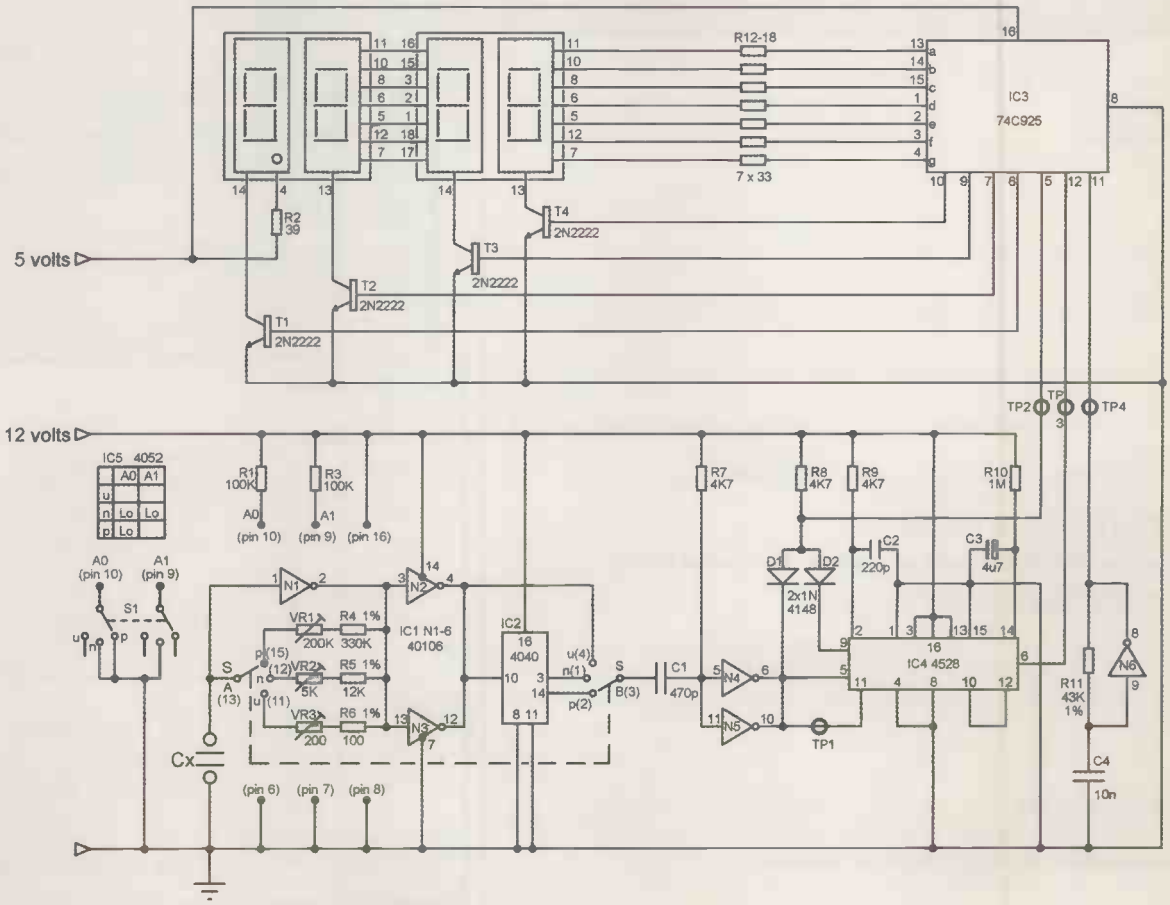

Figure 2: Capacitance meter circuit diagram

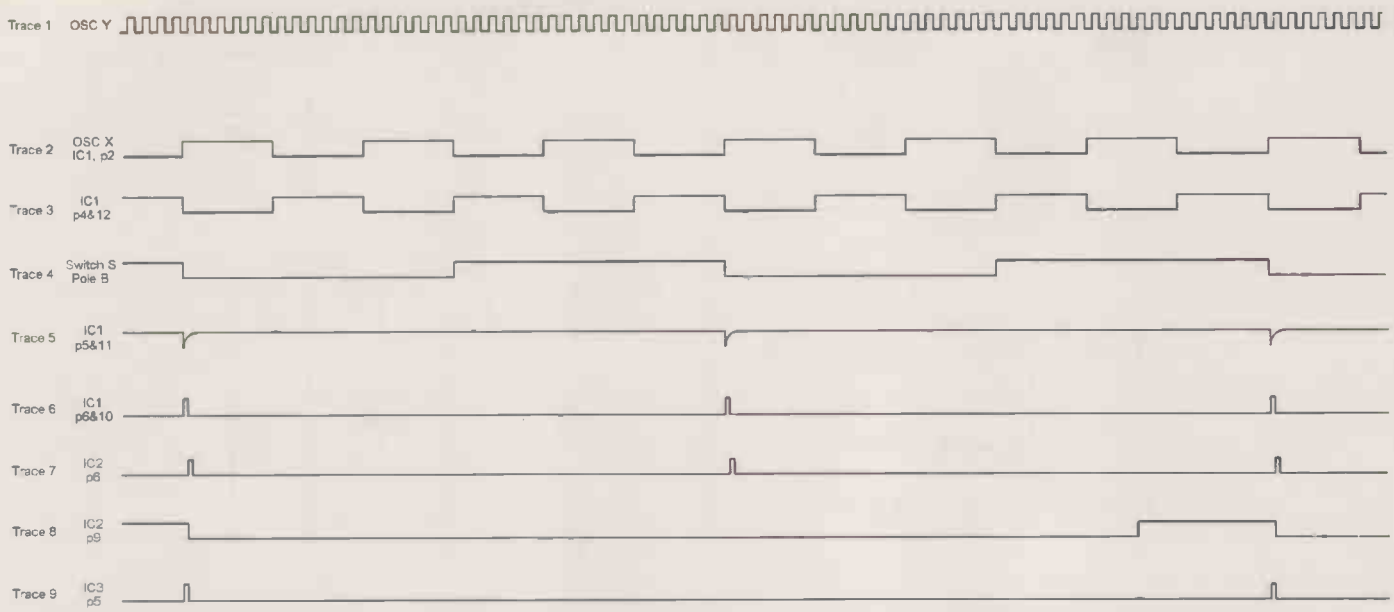

Figure 3: Timing pulses

count the 1000Hz output of Y. So at the end of the experiment, the counter's display will show 1000 and we can say that this represents the 1000 picofarads of the 1nF capacitor used in oscillator X.

If the 1nF capacitor is now replaced by another marked 2n2 and the experiment repeated, the new period of a single X wavelength will last about twice as long as previously, during which time the counter will count many more pulses from the Y oscillator. In fact, if our 2n2 component is also correctly marked, the display will now show 2200 and we can interpret this as the capacitor's picofarad value.

Of course all this presupposes that the marked 1n of the original capacitor used, is precise. But even if the value of this component is only an approximation, we can at least get useful relative values for other capacitors tested against the fixed frequency of the Y oscillator.

So now the design strategies in making our capacitance meter reduce to constructing a frequency counter, some simple logic to gate it on and off and the accurate calibration of one oscillator against another. Let us take these in order.

The circuit diagram

The four digits of a pair of double 7-segment, common-cathode displays shown in the circuit diagram of **Figure 2**, receive multiplexed outputs from IC3. Four internal decimal counters in this CMOS 74C925 integrated circuit total the pulses that are being input at its clock pin 11. The coded contents of each counter are output sequentially to the four displays, and transistors T1, 2, 3 and 4 switch on the correct digit at the right time. This multiplexing operates at a refreshment rate of about 1000 times per second, which of course the eye perceives as continuous. R2 is a 39Ω resistor that lights a single decimal point between the most significant display digit and its neighbour, while resistors R12 to R18 limit current to the seven LED segments.

There are two input pins on IC3, which we can use to control the 74C925: pin 5 governs the latching of the display and pin 12 is the counter reset. When pin 5 is high and pin 12 low, the counters are 'transparent' and the displays show the current count being incremented. But when pin 5 is taken low, the total achieved at that moment is frozen into the display. The count will continue internally and a new total will be displayed and latched every time pin 5 is taken high and then low again. Taking pin 12 high inhibits all counting and the internal counters are zeroed. But if some total has already been latched into the outputs, that number will continue to be displayed, independent of the state of pin 12. That outlines the control of the frequency counter with its displays. These components operate from a 5 volt supply.

There are three other major segments of the circuit: the gating logic, the X oscillator with its scaling components and the Y oscillator. They all operate from 12 volts but fortunately the outputs from these sections are fully compatible with the inputs of the 74C925 without level-shifting. Let us consider the Y oscillator first.

IC1 is a 40106 CMOS chip with 6 independent gates, each one functioning as an inverter with Schmitt-trigger action. Gate N6 at the far right of the diagram is bridged by resistor R11 and has capacitor C4 connected between its input and ground. This combination is therefore an oscillator and serves as the Y standard referred to above. Its output, shown diagrammatically as Trace 1 in **Figure 3**, is connected directly to clock pin 11 of the frequency counter chip IC3.

At the opposite side of the diagram, inverter N1 is bridged by one fixed and one variable resistor, with a particular pair selected by pole A of the 3 position range switch S. Cx, the capacitor to be measured, is connected between N1's input and ground. This combination is also an oscillator and becomes the slower one previously referred to as X. Its output from IC1, pin 2, is illustrated by trace 2 of Figure 3.

The X output is inverted and buffered by the parallel gates N2 and N3 (trace 3, IC1, pins 4 & 12) and input into clock pin 10 of the divider IC, 4040. The B pole of switch S selects an output from pin 14 or from pin 3 of this IC, or directly from pins 4 & 12 of IC1.

Whichever one is chosen, this waveform is represented (very notionally) by trace 4 of **Figure 3**.

When the output is high at pole B of switch S, C1 is discharged because the common input of the parallel gates N4 and N5 is held high by R7. But when the output at pole B goes low, the input to these gates is taken briefly low while C1 charges (trace 5, IC1 pins 5 & 11) and hence the output of N4//N5 goes briefly high (trace 6, IC1 pins 6 &10). As can be seen from the timing diagram, the pulses of trace 6 are synchronised with rising edges of certain waves of oscillator X.

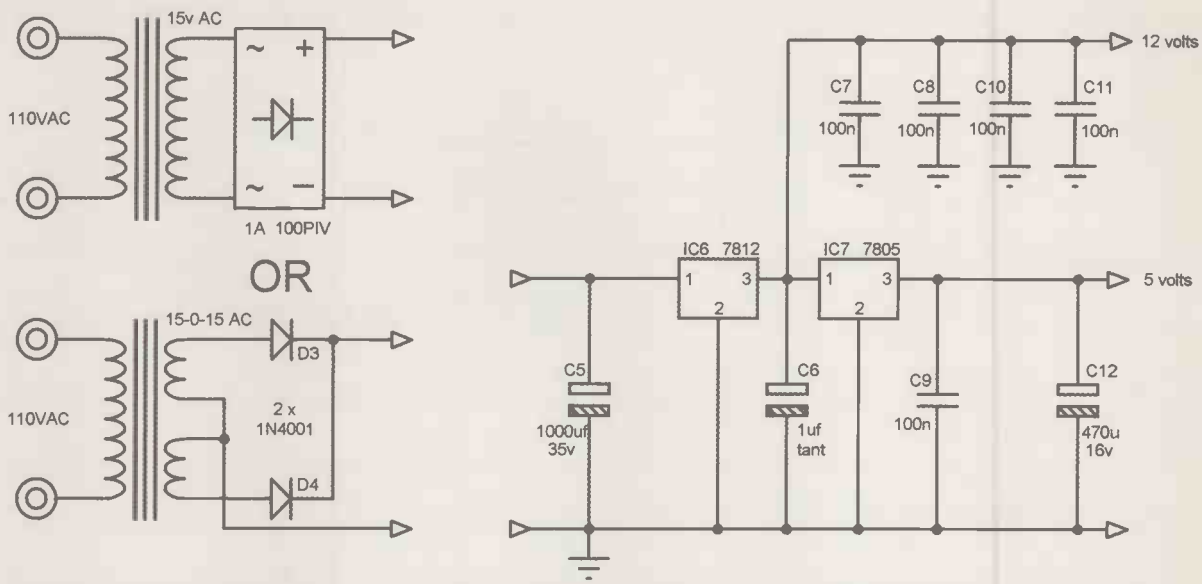

Figure 4: Power supply

Some gates in the 40106 are paralleled in this application partly because the inputs of otherwise unused CMOS gates should be tied to something, and partly because paralleled gates provide increased buffering (or protection) of the wanted signal.

IC4 is a single chip carrying a pair of independent monostables. Each of these has two separate trigger inputs: pins 5 and 4 for one and 11 and 12 for the other. Each also has two outputs, pins 6 and 7 (the latter unused in this application) for the first, and pins 10 and 9 for the second. Pins 6 and 10 output positive-going pulses and pins 7 and 9 negative ones.

For the first monostable, pin 5 is the clocked input while pin 4 is held low. This configuration results in the negative edge of the input pulse at pin 5 triggering a positive output pulse from pin 6 (trace 7, IC2 pin 6). The small values of the timing components R9 and C2 result in this pulse being only about 1 microsecond long. This is input at pin 12 of IC3 to reset the internal counters of the 74C925. Consequently the frequency counter counts the output of the Y oscillator from the initial falling edge on trace 7 to the next rising edge. Then on the adjacent falling edge, the count starts again from zero. And so on.

Returning to IC4, the clock input at pin 11 of the second monostable is connected to pin 5 and so is triggered by the same incoming signal as the first. As before, the falling edge of the original pulse from pins 6 and 10 of IC1 is the trigger for this second monostable that outputs its signal at pin 9. However, this pulse differs from the first monostable's in three ways (see Trace 8, IC2 pin 9). First it is negative, second the large values of its R10/C3 timing components result in a long pulse-width of about a second, and third, by feeding back the inverse of this pulse from pin 10 into pin 12, the monostable cannot be re-triggered by any intermediate pulses into pin 11. Hence this monostable always times out and is subsequently triggered again only when the next falling edge from trace 6 comes along.

R8, D1 and D2 form an AND gate configured so that the original pulses from pins 6 and 10 of IC1 (trace 6) are AND-ed with the long pulses from pin 9. The brief resultant pulses appearing at the join of R8 with the diodes, are represented by Trace 9 and used to open and close the latch at pin 5 of IC3. Consequently the counter's display is never up-dated faster than about once every second. If up-dating was carried out very much more frequently, measuring small value capacitors would result in a high frequency flicker in the display's lower digits when, for example, it might be difficult to distinguish between a reading of 0.100 and 0.188.

I have not so far explained IC5, shown somewhat transparent and exploded in the circuit diagram. Obviously S can be a good quality, mechanical 2 pole, 3 way switch but it will need to be connected from the front panel back to the circuit board by 8 wires, some carrying quite noisy signals. These will create no problems if the connecting leads can be kept short. However, it is very

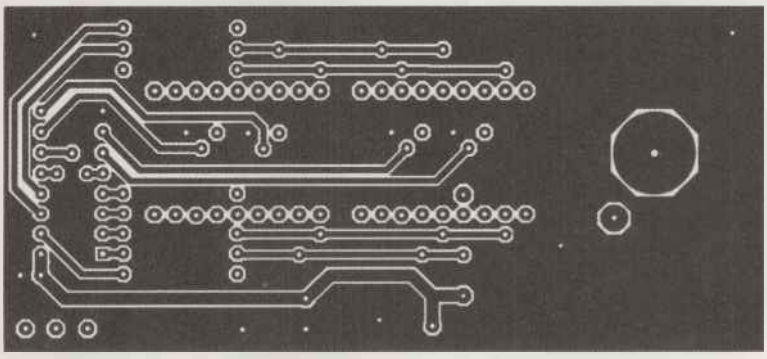

Figure 5a: First copper side of the display PCB

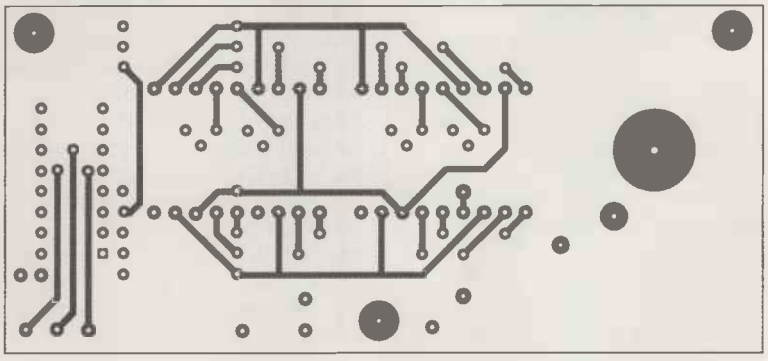

Figure 5b: Second copper side of the display PCB

much easier to use three-quarters of each of the two, 1-pole 4-way solid-state switches contained in the CMOS 4052 multiplexer chip. The pin numbers for this IC are shown in brackets close to the connections for S, as are the chip's power supply pins (8 and 16). In this design the two controls, A0 (pin 10) and A1 (pin 9) of the 4052, are normally held logic high by R1 and R3 respectively. Using this IC as a two-pole-three-way solid-state switch still requires a 2P3Ω mechanical device (which I call S1) but now this switch only needs connections to A0, A1 and zero volts, and consequently only switches control signals to ground. The Table and the S1 switch sub-circuit in **Figure 2** show which control pins of IC5 need to be grounded to select a particular range on the meter. A blank indicates that no connection needs be made. Using the 4052 means that both poles of S are now internal to the IC, and S1 is the mechanical device controlling only the logic states of A0 and A1.

Note that although **Figure 3** is not drawn to scale it still reveals two important parameters. First, each zeroing pulse to IC3 pin 12 from IC2 pin 6 (trace 7) is delayed by the width of the originating pulse at IC1 pins 6 and 10 (trace 6). Secondly, both these pulses take up time during X's wavelengths when the counter ought to be counting but is not. Consequently the component values of the pairs C1/R7 and C2/R9 produce pulses as narrow as possible while still providing reliable triggering. In practice, the counting time lost to these triggers can be considered negligible relative to the period of X's wavelengths.

Figure 4 is the schematic for the very conventional power supply that runs the meter and its displays. A mains transformer is used with either bridge or diode rectification. IC6, a 12 volt regulator with its associated capacitors C5 and C6 ensures a stable DC supply for the oscillators and logic circuit, but also feeds IC7, a 5 volt regulator whose output runs the frequency counter and the displays. Capacitors C7 to C12 decouple the 5 and 12 volt power lines at appropriate places on the PCBs.

A very well smoothed and stable 12 volt DC supply is essential since the frequency of both the X and Y oscillators is a function of +V.

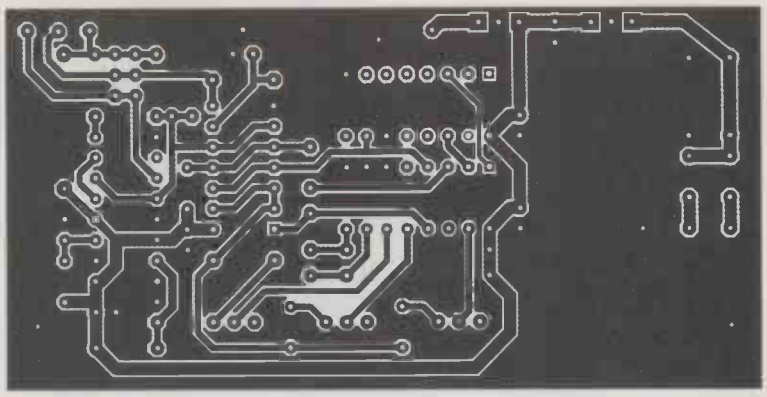

Figure 6: Copper layout for the components PCB

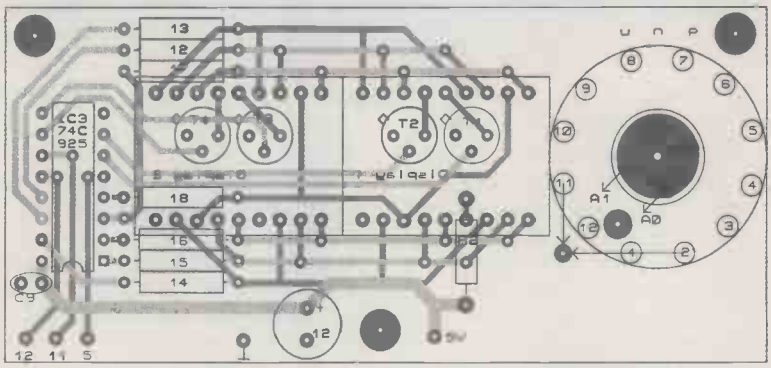

Figure 7 Component placement for the display PCB

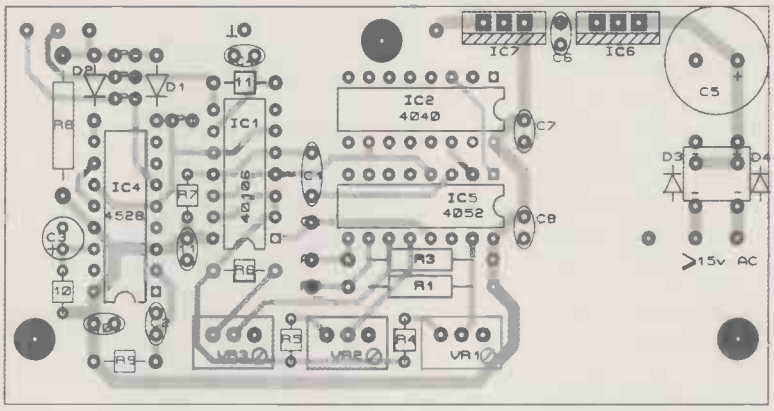

Figure 8 Component placement for the component PCB

Making the meter

There should be few problems in making up the meter. All the components are readily available and

Figure 9: Component sandwich (bottom)

Figure 10: Component sandwich (top)

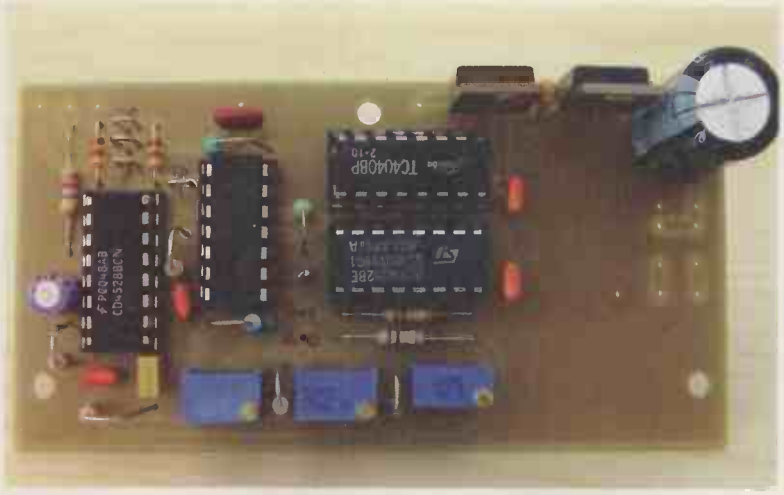

Figure 11: Components' board

although it is probably easier to build it on the printed circuit boards shown in **Figures 5a and 5b** (the front and rear surfaces of the Display PCB) and **Figure 6** (the single- sided components' PCB), there is nothing particularly unique about these layouts. However, square-wave frequencies are involved in this design so signal-carrying tracks should be as short as possible and ground-planes are a good idea. **Figures 7 and 8** are enlarged diagrams of the PCBs to help in correct component placement when making up the two boards.

The double-sided Display PCB is a little complicated and is designed to be attached parallel to, and behind the front face of the meter's case, as shown in **Figures 9 & 10**. It could even be the (not too pretty) front face of the case if this were thought suitable.

Just the two dual 7-segment displays are through-hole mounted on one face of the Display PCB (**Figure 12**), while the 16 pin DIL socket for the 74C925 IC, together with R2, R12 to18, C9 and C12, are all through-hole mounted on the other (**Figure 13**). The range-change switch is fixed through a hole in the PCB, and has its spindle available on the same face as the displays. Before construction begins, be sure that you have correctly identified which surface of the circuit board is which.

The Display PCB has a large number of holes that are designed to allow the connection of corresponding copper tracks on opposite sides of the board. Sometimes these vias are linked by the legs of certain components being soldered to both sides, and sometimes separate short lengths of wire are needed to make these connections. Some vias are positioned beneath a component and will need to be soldered first. Components such as the switching transistors, have some leads which pass through the board and need to be soldered to the 'back' face while others are surfaced-soldered to the front. The order in which the board should be populated is fairly self-evident, as is determining on which face (or faces) of the PCB solder connections are to be made, but do think well ahead as construction proceeds.

Tracks and earth plane areas are often close together and great care is needed to avoid shorts from solder migrating from pad to track or to ground. To avoid heating adjacent copper, use a relatively cool soldering iron (around 420∞F, if you can control the temperature; a low wattage heating element if you can't), and fit the iron with a very fine tip.

As most of the integrated circuits are of CMOS construction, they should be handled as little as possible to avoid damage from static charges. DIL ICs should be fitted into sockets.

The second PCB referred to previously as the 'Components' Board' is single sided but should have a filled ground plane (as shown in **Figure 11**). Some of the resistors on this board are recommended to be 1% types but for their stability rather than their accuracy.

It is good practice always to set trim-potentiometers to their mid-positions before soldering them into a PCB. This is particularly true for multi-turn trim-potentiometers where the position of the wiper cannot be seen and where resistance measurements made after fitting may be distorted by adjacent components.

There are a number of ways of powering this project. A mains transformer with an AC output of at least 15 volts at ? amp should be used. Extra pads on the PCB allow rectification by either a 4 pin DIL bridge or two diodes, depending on whether the preferred transformer has a single, dual or centre-tapped secondary. Alternatively a 'wall-wart' can be used provided that it will supply a DC voltage of 15V or more when loaded with $^1/_2$ amp. If used, its output should be connected directly across the pads of C5; then the bridge or rectifying diodes can be omitted. Many nominal, 13.8 volt, battery-charging 'warts' will be found suitable.

Final connections and setting up

When component placement on both boards is complete, contacts 11, 1 and 2 on the range switch should all be connected to the ground plane and two short pieces of wire used to connect poles A and D on the switch to points A0 and A1 respectively on the Components' PCB. Short red and black test leads terminating in croc-clips also need to be soldered respectively to the Cx pad, and to ground. (Note that because screened cable would introduce its own capacitance, it is not particularly recommended for use as a test lead in this project).

The two PCBs should then be set parallel to each other (with most of their components between them), and three, one-inch-long spacers used with suitable nuts and screws to join them together. Attached in this way five pads line up along an edge of both boards and corresponding pairs can be wired across to provide connections for the 5 volt supply and pins 5, 11 and 12 of IC3. Even if the connecting bolts and spacers are metallic, a fifth wire link should be used to ensure a good connection of the boards' ground planes.

You will notice that the Components' PCB is slightly wider than the display board. This allows easier screwdriver access to the adjusting screws of the trim-potentiometers provided that they are of the top-adjust variety.

With no capacitor connected, select the picofarad range and apply power. A properly working meter will display a small reading. On my prototype this is 0.025, as shown in **Figure 14** and represents 25pF of stray capacitance due to leads and the meter itself. Keeping cables short to the component under test and avoiding the use of screen lead will minimise this figure but its value is of little real importance since it is easily subtracted from all readings made using the picofarad range. For the higher scales this error becomes insignificant.

We now need to calibrate the meter's low range and in an ideal world a 1%, 1000pF silvered mica capacitor would be selected from

your spares box and VR1 adjusted until the meter reads 1000 plus the amount of stray capacitance. If you do not have such a capacitor to hand, it just might be worth buying one, simply to have a reliable initial standard.

However it is still possible to get very good and ultimately highly accurate readings by an averaging method. This involves getting together a wide selection of capacitors in the range being set up and tabulating their marked values. Select from the list a clearly labelled and good quality component and connect it to the meter.

Adjust VR1 until the display is numerically the same as the component's marked value, plus the amount of stray capacitance. Leaving VR1 at that setting, use the meter to find the apparent values of all the other capacitors. These results (each minus the stray capacitance) should be recorded in a second column of the table. Even after one set of readings it should be obvious whether in general the values are all displayed as too high or too low. If discrepancies are mostly in the same general direction, give VR1 one or two turns (anti-clockwise to increased displayed readings or clockwise to decrease them) and measure again. Repeat this until readings generally fall into line. Remember that capacitors in this range need to have their readings reduced by the value of the stray capacitance. Also give more credence to the displayed value of a modern, good quality capacitor rather than the one you cannibalised thirty years ago when you retired your first black-and-white TV. Keep in mind that other than some 1% polystyrene and silvered mica types, most modern capacitors in this range carry tolerances of either 5% or 10%. Check your catalogues to determine the expected accuracy of the ones you are using for these tests.

Small variations in the value of the lowest digit in the display are always to be expected.

Once the picofarad range has been set up your satisfaction, choose a good quality, high-range capacitor (say, 1n to 6n8 in this case), measure and record its value and then carefully put it away for future re-calibration if this ever became necessary.

Adjusting any one trim potentiometer has no effect on the setting of the other two so the order in which the ranges are calibrated is immaterial.

Unless you have access to 1μF and 1000μF standard capacitors, the remaining ranges need to be calibrated in a similar manner to that described above. VR2 is the potentiometer which must be adjusted to set up the 9.999 (10) microfarad range and VR3 the 9,999 (10,000) microfarad range. I suggest that for these ranges also, two 'standard' capacitors are subsequently selected, their measured values recorded on them, after which they should be safely stored.

Remember that the face value of electrolytic capacitors can be very inaccurate indeed, sometimes differing from the real capacitance by 100% or more! Further, these components when left unused for long periods lose form and need to be 'reconditioned'. Using this meter to measure the component's value will help reform it and, while this is happening, you will see a drift before a stable value is achieved. Any regular drifting in readings over a very long period should make you suspicious of a capacitor's quality.

Three other things need to be pointed out when measuring the largest capacitors in each range. First, the component should remain connected long enough for the reading to stabilise. Secondly, for these large value capacitors, the wavelength of X is long and it may be more than one second before any meaningful reading appears. And even when it does, it is not likely to represent the real capacitance. Just connecting test leads to the component will create a stream of extraneous pulses resulting in the first reading probably being far too high. Add the 'reconditioning' factor for electrolytics in particular and you may have to wait for the third or fourth reading before it becomes stable and repeatable. Thirdly, when large value electrolytic or tantalum capacitors are disconnected from the meter following testing, they may very well be charged and could remain so for days. At 12 volts this is of little danger to the operator. But if testing the component immediately precedes its being wired into a circuit board under construction, the capacitor's residual charge might very well destroy other components already connected. So, after testing large value capacitors of this type, a 10k resistor should be used to discharge them by bridging their terminals for a few seconds. Polarised capacitors need to be measured with their negative terminal joined to the ground test lead.

Figure 12: Display PCB (front)

Figure 13: Display PCB (rear)

Figure 14: Stray capacitance

Some final thoughts

The accuracy of results is high across the whole capacitance range measurable with this meter. On all scales, there is about a 1% accuracy on components whose values are greater than 100 units. Those below 100 units are usually accurate to at least 5%, but this is also limited by the number of digits displayed. Above about 1000µF the patience of the operator to wait long enough for the capacitor to reform and the display become fully stable may be the limiting factor.

Repeatability of readings is also of a good standard although it must be pointed out that simple oscillators built just from an inverter, an R and a C are not absolutely stable and can be rather temperature sensitive. By building both the X and Y oscillators from inverters in the same IC, the situation is somewhat improved since there will be certain proportional correction as both experience the same temperature changes.

Electronics' experimenters may be curious to know how the scaling section of the circuit works and how the component values were established. As we have seen above, when measuring a component whose capacity is about 1000 units, the Y oscillator must provide a frequency which is 1000 times faster than the X oscillator. This would seem to mean that Y must have one value for the picofarad scale, another for nanofarads and yet another for microfarads. But in this design I wanted the simplicity and indeed the improved accuracy of Y providing a single frequency.

Consider the microfarad scale first. The measured frequency of the Y oscillator in my prototype was found to be 2590Hz. As you will see from the circuit diagram, the X output for the microfarad scale is not routed through IC2 but goes directly to the appropriate way on switch S. Hence for a 1000µF capacitor the frequency of the X oscillator has to be 2.59Hz. By experiment I determined that the corresponding resistance to provide that frequency with 1000 microfarads was just over 280Ω. By re-working the Y oscillator's components I could have ended up with other values but decided to settle on 280Ω: although a relatively small value, it is still large enough to limit charging currents to a reasonable size even for high value capacitors. So that settled scaling for the top range.

Oscillator Y outputs a constant frequency. Consequently measuring a component having a value of 1000 units requires the frequency at pole B of switch S to be 2.59Hz on all ranges.

So, for the lowest scale and while measuring a 1000pF capacitor, we now need to determine the value for R that will also make the output 2.59Hz. The only problem here is that to get a frequency this low with such a small value capacitor, R would have to be hundreds of megohms!

I decided to get around this problem by using an integrated circuit to divide X's frequency down close to the required level and then adjust a variable R to make it precise. Using the output from pin 14 of IC2, we get a frequency which is the input divided by 1024. This means X's frequency must be 1024 x 2.59 or 2652Hz, which gives the reasonable value of about 435,000Ω for R. Further, using frequency division here has the added advantage that we are now counting Y's frequency over 1024 cycles of X and so capacity values across the whole scale are displayed to a considerably higher order of accuracy.

This leaves calibration of the middle range that I wanted to set half way between the other two. Since the picofarad scale is produced using frequency division by 1024 (which is 2^{10}) and the microfarad scale is used directly (which we can consider as division by 1, or 2^0), logarithmically speaking half way between them will be a scale produced using division by 2^5 (which is 32). The 4040 divider chip offers division by 32 at pin 3. We know that the frequency at the B pole of S must be 2.59Hz, and hence the X frequency for a 1000nF capacitor must be 32 x 2.59 or 82.9Hz, for which an R value of about 13,000Ω is necessary. Once again using this averaging method where 32 periods of X are being counted, more accurate and stable results can be achieved across the whole of the range.

Finally, there is no easy way to provide some sort of indication that will confirm that the meter scale being used to measure some unmarked capacitor is the correct one. However, if you were wrongly trying to use the picofarad scale to determine the capacitance of, say, a 27n component, the meter, after a long delay, would probably display something like 7.262 or 6.893 and if you waited for further periods, you would see that subsequent updates were similar although the two lower digits would be somewhat variable. Of course what the meter is trying to show is the capacitor's value with its most significant digit (2) missing off the left-hand side of the display. In general therefore, if there is any doubt over a particular measurement, go to the highest range and work backwards from there. In this example the top microfarad scale would display as 0.000 with the lowest digit perhaps occasionally flicking to 1, while the middle range would display a true and stable 27.

This 'left-hand-figure-missing' quirk can be exploited to advantage: the meter can be used to confirm (or otherwise) the capacitance of very high value components. If, on the top scale, you try and measure the capacity of a marked 15000 microfarad component for example, eventually the meter might very well read 5.456 or 3.324 from which one can make the reasonable assumption that the capacitance is really 15,456 or 13,324 microfarads.

THE DIODE:
The first electronic device

Electronics – in the shape of the diode valve – celebrates its centenary this year. Gregg Grant takes us back in time

Three men were primarily involved in developing this, the first active electrical device. They were a scientist, an engineer and an inventor.

The scientist provided the theory of how the device worked and the engineer built the first working example.

Paradoxically the inventor –who'd first observed the original effect, which was his only scientific discovery, could see no practical use for what he'd stumbled across!

The Inventor

Thomas Alva Edison could fairly claim to have banished the candle as an illuminating device to the far corners of human activity such as cake decoration, solemn vigils and celebratory processions.

Throughout his life, Edison filed no less than 1,093 patents covering the discovery of - and improvements to – the gramophone, the power generator and the telephone. Whilst these achievements are impressive, they appear less so on closer inspection, for no less than 389 of these patents were taken up with improvements to power generation and - above all - to the electric light bulb.

He'd begun work on improved lighting in 1878. In the course of his work, he'd do far more than simply improve on the candle for, in a long period of testing and experimentation he would - albeit unwittingly – kick-start today's electronics industry.

The problem in finding a more efficient replacement for the candle and the gas mantle lay in discovering a material that could act as an incandescent element, in other words one glowing with heat. A high temperature was a prerequisite, although it had to be less than the melting point of the material in question. Equally as important was longevity as a domestic light source.

Originally, Edison had opted for platinum, but he also experimented with a variety of other substances from boron to rhodium, chromium to zirconium. By 1880 - despite better vacuum pumps and some quite clever manufacturing techniques – broken filaments and blackened bulbs were still a feature of incandescent lamp development. Edison decided that some further, basic, research was needed.

In 1883, he placed a metal plate inside one of his evacuated bulbs, close to the filament, as shown in **Figure 1.** His idea may have been to have the plate absorb some of the remaining air in the bulb and therefore lessen its destructive effect on the filament. What happened instead at once surprised and baffled him.

The circuit galvanometer registered an electric current, flowing from the

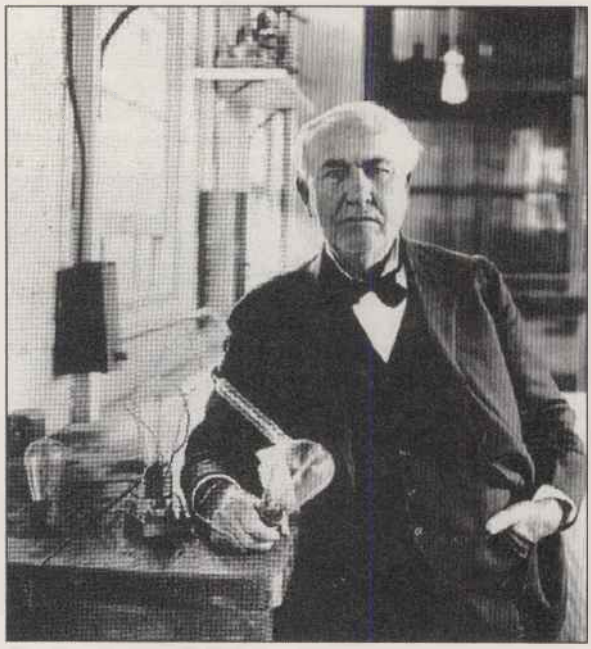

Sir John Ambrose Fleming (photo: electron-wave.com)

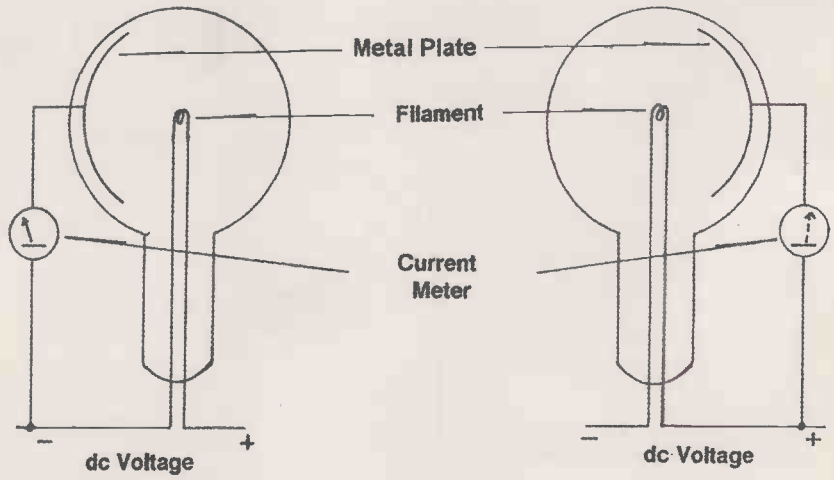

Figure 1: The Edison effect

hot filament to the cold plate across the gap separating them. He'd had discovered the *Edison Effect*, undoubtedly one of the great missed opportunities of the nineteenth century. Nevertheless Edison - as a matter of long-standing practice – wrote up this experiment and applied for a patent for it.

The Scientist

Owen Richardson was born in Dewsbury, Yorkshire in 1879 and graduated from Trinity College Cambridge in 1900. Having carried out further research at the Cavendish Laboratory under Sir Joseph Thomson, who'd discovered the electron in 1897, Richardson was appointed Professor of Physics at Princeton, New Jersey, where he remained for the next seven years.

He had begun to study the Edison Effect shortly after graduation and swiftly discovered that heated metals tended to emit speeding electrons which - of course -constituted the current Edison had observed. In 1903, Richardson brought out his theory of *Thermionic Emission* and he coined the term *Thermionics* for this phenomenon.

By 1911, Richardson had shown conclusively that even the very small amount of air remaining in the glass envelopes of the day had nothing to do with the current. He formulated Richardson's Law, which expressed the dependence of the saturation current i on the filament temperature T in the equation:

$$i = AT^2 \exp^{(-w/kT)}$$

Where: A is a universal constant; W is the electronic work function of the metal

K is Boltzmann's Constant

Richardson continued with his experiments, improving the on the hand pumps used at that time to create a vacuum, as well as investigating - and improving on – vacuum clean-up techniques.

His years of study culminated in 1910, with the publication of his book *The Emission of Electricity from Hot Bodies.* Nevertheless his theory of how the Diode valve worked - in essence thermionic emission – was not widely accepted until the end of the First World War.

Thermionic emission results from applying energy - be it heat, an electric field, light or a collision – to a material such that the electrons within it are given sufficient impetus to overcome the energy barrier keeping them there.

This barrier is a unique property of a substance and is termed the *Work Function,* or Electron Affinity.

Consequently, the best materials for thermionic emission are those with the lowest work function. A material's work function is usually expressed in electron-volts, (eV), 1eV being the energy gained by an electron as it traverses a potential of 1 volt. This is the equivalent of 1.6 x 10^{-19} joules.

When the oxides of a substance such as barium, strontium and thorium are combined with metals like nickel or tungsten, very low work functions can result. For example, the work functions of tungsten and barium when used together are lowered considerably by the action of adsorbed atoms on the emitter's surface, where dipoles are created between the surface and a single layer of atoms.

This results in a work function of as little as 1.8eV when a single atomic layer of barium is adsorbed on the surface of a tungsten-osmium matrix.

Richardson's work was crucial to the further development of the electronic valve and similar components such as the cathode ray tube, although the Russian-American physical chemist Saul Dushman subsequently modified his equation, in the early 1920s.

The Engineer

A year before Edison's discovery, the British Edison Company appointed John Ambrose Fleming as its 'electrician.' A graduate of Imperial College London, Fleming had also spent four years studying under James Clerk Maxwell at Cambridge, and so was a highly qualified electrician!

Two years after joining the company, Fleming visited the United States, during which he discussed the problems of electric lighting with Edison himself. In the course of their conversation, the inventor demonstrated the Effect called after him and informed his visitor that he was - at the time – using it to regulate the supply voltage in the power stations of the day.

His interest engaged, Fleming began experiments of his own on his return to Britain. In the course of his investigations, he noted that when the galvanometer was connected between the metal plate and the external positive electrode of the lamp, a current of some 4.5mA was registered.

With the galvanometer connected between the lamp's negative electrode and the internal plate, no current was registered. Fleming recorded this experiment in a paper to the Royal Society in 1890. Another

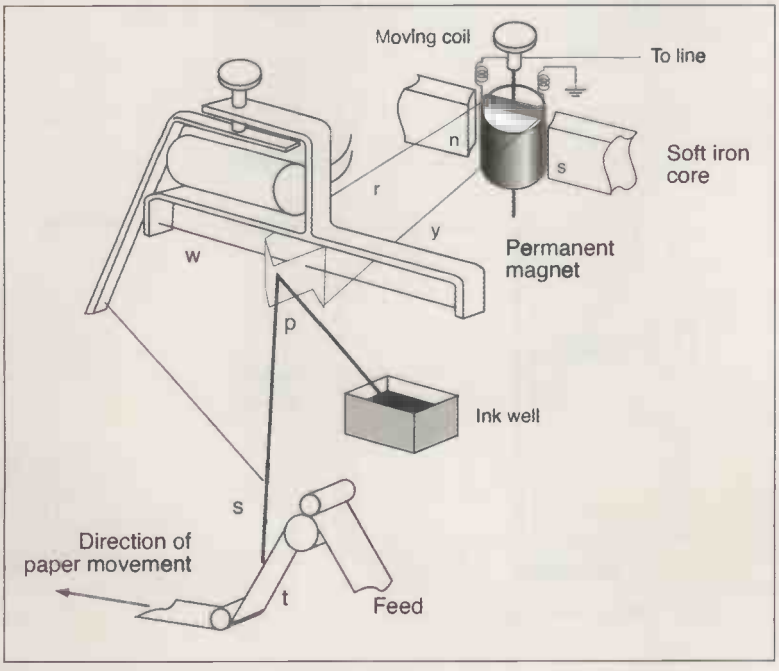

Figure 2:
above and right
The syphon recorder
(photo: Telegraph Lore)

eight years would pass however before he could devote time to the further study of the Edison Effect.

In 1899 he was appointed a scientific advisor to the Marconi Company and by 1903, he was working almost exclusively on techniques for measuring the length of Hertzian Waves, as radio signals were then termed.

The principle drive behind the diode valve was the rectification of alternating currents, (AC), into direct currents, (DC), which could then drive the cable recording instruments of the day, in particular Lord Kelvin's Syphon Recorder, shown in **Figure 2.**

Having realised that the Edison Effect could do just that, Fleming asked Edward Gimingham, the manager of the Edison-Swan lamp factory to make 12 carbon-filament lamps for him. In each one, Fleming inserted a metal cylinder around the filament, held in place by a wire sealed in through the glass envelope, as shown in **Figure 3.**

When power was applied to his creation, Fleming noted that an electric current passed from the filament to the cylinder but not in the opposite direction. The space between the cylinder and the filament was - as he put it - a one-way street for electric current. The device in short acted like the valve in a water pipe, allowing current flow in one direction only. Consequently when he decided to apply for a patent, Fleming opted for the term *Valve* for his invention.

On the 16th November 1904, British patent No. 24850 described the first electronic valve, variously known as the Kenotron, Vacuum Tube, Fleming Diode or - simply – the Diode. Later, he was also granted patents in Germany and the United States.

The Electronic Future

The development of electric lighting, its by-product thermionic emission and the invention of the electronic valve changed our world completely. The diode was not only the earliest proof that Richardson's theory was correct: it was also the clue as to why Edison's early lighting endeavours had run into trouble. The three men involved in these experiments and developments may be said to be among the precursors of the 20th century and much that would subsequently follow.

Edison of course continued with his lighting experiments. In his trial-and-error testing for materials for the filament he investigated some 6000 substances, finally settling on carbonised bamboo fibre. This material provided white light for more than 1000 hours in a vacuum. In fact he presented one of his lamps to the Science Museum in 1880, as shown in **Figure 4**.

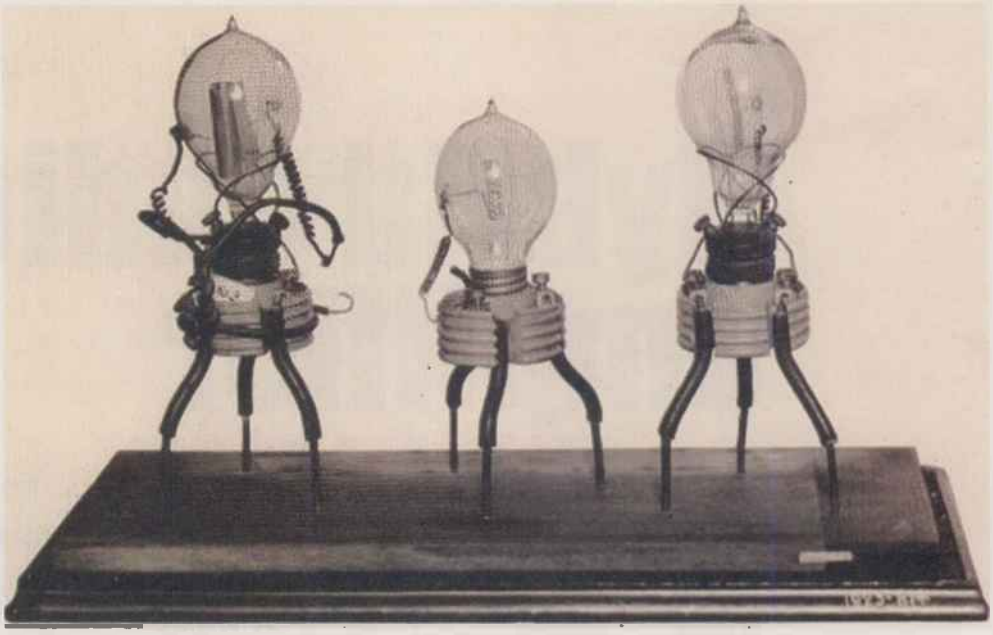

Figure 3: Fleming Diodes *(photo: Marconi plc)*

Another area in which he improved matters considerably was electric power generation. When he began work in this field, generator efficiency was lurking at the 40% mark. By the time he'd finished, it stood at 90%.

He also had a hand in power cables, electricity meters and public lighting. He gave America a reputation for 'can-do' innovation and improvisation which it still enjoys - witness their belief that 'there's no way like the American way' – had an immense influence on the last century and was crustily likeable with it.

Owen Richardson's subsequent researches covered a wide area and he made distinguished contributions to photo-electricity, spectroscopy, thermodynamics and X-rays. He was the recipient of many awards, beginning with his election to a Fellowship of the Royal Society in 1913.

Fifteen years later came the ultimate distinction when he received the Nobel Prize in Physics for his work on thermionic emission. He was knighted in 1939 and lived for another 20 years, long enough to see the device whose workings he'd so succinctly explained replaced by the transistor.

Fleming continued lecturing at Imperial College which under him, became the first such institution in Britain to have a laboratory specially created for the study of high frequency engineering. The inventor also of the simple and effective Right Hand Rule - long familiar to all of us in the communications-engineering field – Fleming also introduced the term *Power Factor* in the course of a lecture in 1892.

The first incumbent of the Chair of Electrical Engineering at London University, Fleming designed the earliest electric lighting system for ships and was the author of over 100 scientific papers and books.

He also collaborated with Sir James Dewar - he of the eponymous flask - over a number of years in research into the effect of low temperatures on the electrical resistance of metals.

Like Richardson, Fleming received many honours and awards in his long and most productive life. Elected a Fellow of the Royal Society in 1892, he also received medals from a number of scientific and engineering institutions and was knighted in 1929.

He died in Sidmouth, Devon in 1945 at the age of 96, having seen his invention develop from a laboratory curiosity into a revolutionary device. The humble diode and its subsequent derivatives led to world-wide communications, entertainment, sea and air radio navigational aids and facsimile communication, the whole sustained by a vast specialist manufacturing industry. No mean feat for a phenomenon its discoverer could see no practical use for!

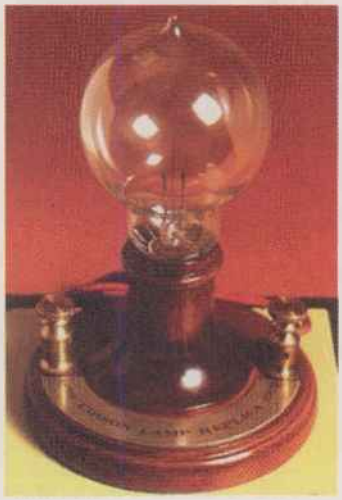

Figure 4: An Edison lamp *(photo: Newark Museum)*

Hybrid audio amplifier

Although the majority of audio amplifiers these days are solid state, there is a great deal of interest in valve amps. These are often said to sound better than their solid state cousins do, although they often measure far worse in terms of distortion and frequency response. Jeff Macaulay explains

Technical specifications

The following measurements were taken from the prototype:

- Frequency response (@ 20W): 5Hz – 35kHz - 3dB
- Total harmonic distortion @ 1kHz < 0.04%
- S/N ratio <-100dB below full output
- Power output 80W RMS into 8Ω load

As an audio designer I must nail my own colours to the mast. I think valve amplifiers often do sound better in some respects, midrange quality for example but are often worse sounding at the frequency extremes. Solid state amplifiers however are better when it comes to bass slam. Many of the faults of valve amps can usually be laid at the door of the output transformer that mangles the amplifier's phase and amplitude response. For this reason I like to try and capture the best of valve and solid state amps. The only way I know of doing this is to use valves where they work best and solid state devices where their use improves the sound.

Solid state amplifiers are often over complicated in design and touchy when it comes to setting them up correctly. What I wanted was a design that was robust, simple and incorporating the best features of both amp topologies. After considerable experimentation the present design was evolved. The prototype has given good and trouble-free service for the last 3 years and sounds as musical as a good valve amp with the considerable advantage of a higher than average power output. When I set out to design this amplifier I had several objectives in mind. First and foremost I wanted to retain the classic valve midrange. I have experimented extensively with both valve and solid state and I know that the midrange quality can be obtained from transistors, if they are properly used.

As the voltage gain from commonly available valves (even the high gain ones) is less than 100, a transistor front end seemed a logical choice since an open loop gain of greater than 1000 (60dB) would be available to linearise the amplifier when negative feedback is applied. A simple single transistor gain stage is employed in the amplifier with the valve ensuring that the operating conditions are optimum.

The next requirement was adequate output power. It's of little use having even a perfect amplifier if the full dynamic range of modern recordings cannot be reproduced. This is a fault inherent in many valve amplifiers. Valves also need a reasonable level of operating voltage if they are to act linearly. To fulfil these requirements the output power of this amplifier is set at 80W RMS into 8Ω loads.

Circuit description

Figure 1 shows the circuit diagram of the amplifier. If you are experienced with amplifier designs the first thing you'll notice is a distinct lack of a long tail pair input stage. This is deliberate. Valve based amplifiers cannot use a balanced conventional power supply. This is because they take time to warm up and that would play havoc with the DC conditions at the output. Without special precautions the loudspeakers would be severely overloaded and probably blown by the DC offset.

By using a single power supply and a capacitor coupled output stage these problems are avoided. Also avoided, by using a solid state output stage, is the necessity for band limiting output transformers. By choosing a large enough capacitor, the low frequency response can be extended as far as desired. The 4700μF component used, C4, produces a –3dB point at 5Hz. This is lower than many conventional direct-coupled output stages.

The output stage itself comprises a pair of complementary Vfets. The use of these components makes the output stage easy to drive and immune to short circuited outputs, although the latter is not recommended! The output stage could of course have been fabricated using normal transistors. These however suffer from thermal runaway. To explain, silicon transistors have a base to emitter voltage which is sensitive to temperature. In fact for every °C of temperature rise the base emitter voltage drops by 2.2mV. An output stage based on these transistors has a power dissipation that varies

Figure 1

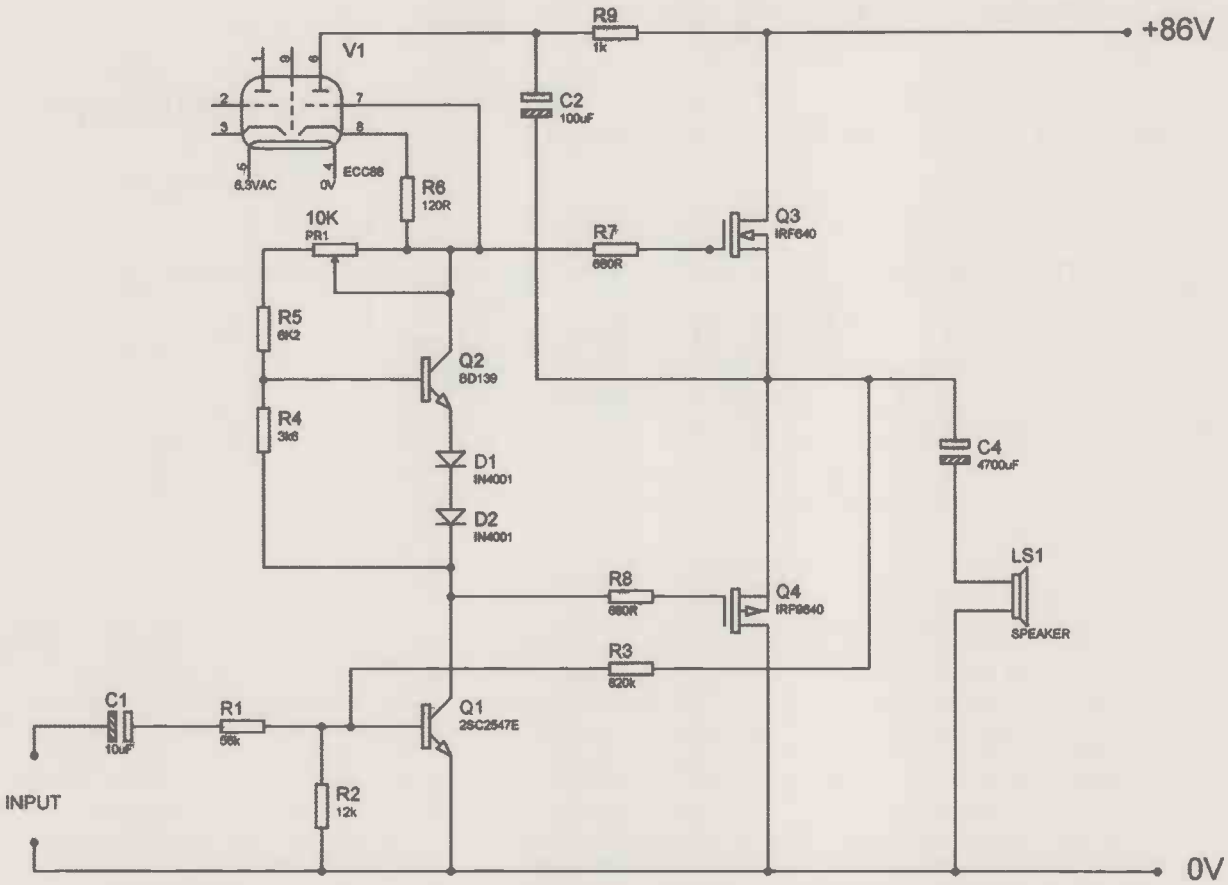

continuously with signal level. Chip temperature will vary in sympathy. As the temperature rises the base emitter voltage falls and collector current increases. This can lead to thermal runaway, a distressing condition in which increasing temperature leads to greater current flow that in turn leads higher temperature and the rapid demise of the output stage.

Power fets come in two varieties, horizontal and vertical. The former are often used for amplifier output stages because they tend to cut off when they get hot. Unfortunately this behaviour makes them prone to crossover distortion. The vertical fets, Vfets, used in this design have a positive temperature coefficient like normal transistors. Unlike normal transistors the effect is much smaller and this makes adequate temperature compensation a simple matter.

All power amplifier circuits comprise two separate stages. A voltage gain stage and the output stage. Looking at the schematic, input signals are coupled into the amplifier via capacitor C1. The voltage gain stage is based upon Q1 used as common emitter amplifier. This transistor gives all the voltage amplification in the circuit but only with the help of the valve, V1. V1 is used both to isolate the transistor from supply line variations and to provide a high impedance load. The latter function is important since the voltage gain of the transistor stage is dependent upon the load impedance into which it works. Here V1 is used as a constant current source. The current is defined by the value of R6 and the grid to cathode voltage of the valve. V1 itself is a dual triode valve, i.e. two identical devices within a single envelope. However, although only one section is used per channel two separate devices are used in the design. There are several reasons for this. The instantaneous voltages on the various electrodes of the valve can vary considerably. This could possibly result in unwanted feedback between device pins. In any event an earlier experimental circuit using just one valve didn't sound as good as one using separate devices! Another hidden function of the valve in this circuit is to provide a slow turn on characteristic to the amplifier. This prevents switch on 'thump'. This used to be a major problem in days of yore. A too rapid turn on would put large current pulses through the speakers running the risk of damaging them. This amp takes about 10 seconds to turn on.

As mentioned earlier Vfets have a small but significant thermal response. To take care of this a modified Vbe multiplier circuit is used. This is the function of Q2. This transistor is bolted to Q3 to provide thermal feedback. D5 and D6 provide thermal compensation for ambient temperature changes and are mounted upon the PCB.

The output stage quiescent current is adjusted by means of PR1. This alters the voltage between the gates of Q3 and Q4 and hence the quiescent current. C2 and R9 form a bootstrap circuit.

Because the voltage across a capacitor cannot change instantaneously, C2 maintains a constant voltage across V1 linearising circuit operation and raising the open loop gain nearly tenfold in the process! R7 and R8 are grid stoppers. These components help to define the high frequency characteristics of the amp and maintain stability. Overall negative

Figure 2:
PSU Schematic

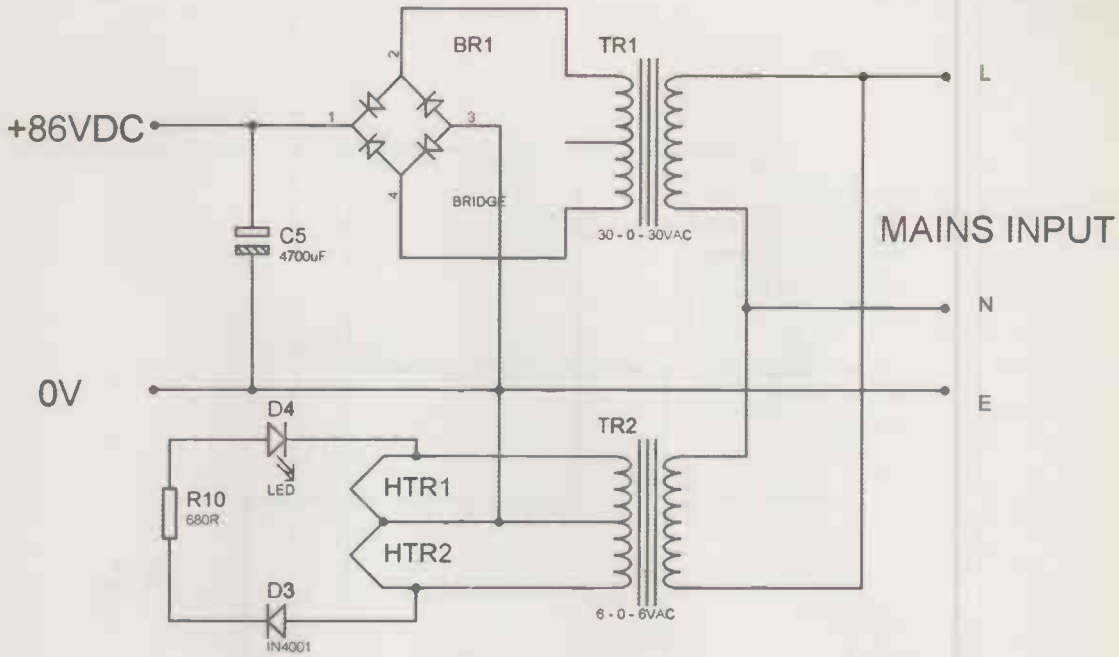

feedback is taken from the output via R3 to the base of Q1. R2, in conjunction with R3, provides DC feedback to stabilise the output voltage. Input signals are fed into the amplifier via the DC blocking capacitor C1 and the series resistor R1. This latter component also defines the closed loop gain of the amplifier by its ratio with the value of R3. Finally output signals are fed into the amplifier via the DC blocking capacitor C4.

Construction

Trying to find a suitable case for a project of this kind is like trying to find hen's teeth! After some considerable thought a bespoke case was designed out of MDF and aluminium panels. The task is complicated somewhat by the need to incorporate a sizeable heatsink for the output stage. The valves and large caps are mounted on the top panel with the output sockets and heatsink mounted on an enlarged back panel. A chrome-plated effect was obtained by using a panel of mirror plastic sheet, obtainable from good modelling shops. This material can be easily cut with a scalpel. The panels are glued into place with contact adhesive.

The directions included here assume that the constructor is building the amplifier from the kit. A more comprehensive set of instructions are included in the kit as are all the parts mentioned. If you are going it alone use these notes for guidance only.

As there is a fair amount of inter-wiring to do most of the active circuit is mounted on a PCB, **Figure 3**. This drawing shows the wiring for one channel the other being identical. Little comment is required about wiring this up. The easiest way is to start with the resistors, add the transistors and caps last, ensuring that correct polarity is observed.

Also shown in **Figure 3** is the output stage wiring. The output devices are fastened to the heatsink using the usual electrically isolated thermal mounting kits. As mentioned earlier Q2 needs to be mounted in contact with the output stage to provide thermal feedback.

This is done by mounting Q2 directly to Q3 by using the same mounting screw. Note that this device needs to be mounted with the metal plate facing upward for the wiring diagram to be correct and to ensure that the collector of this device doesn't short to Q3's drain.

Once the output devices have been mounted check that they are electrically isolated from one another and the heatsink by checking for non-continuity between them. It's easier to use different colour wires for the flying leads. These should be left about 12", 300mm long. At this stage the connector panel can also be drilled and wired up.

Attention can now be turned to making the case. First the rear panel needs to be prepared. Cut out the apertures with a jigsaw and drill the mounting holes as shown. The panels are then carefully assembled using rapid epoxy adhesive. At this stage the case can be finished. I used matt-black spray paint but this is a matter of taste and is left to the constructor.

The valve holders and caps are then attached to the top panel. Final assembly can now commence. The PCB is attached to the underneath of the top panel by self-adhesive mounting pads. The inter-wiring completed according to **Figure 3**. The wires to the output devices are terminated in the connectors and the heatsink and connector panel attached to the rear panel. After a final check of the wiring you are ready to go to the next stage, setting up. Start by turning the presets fully clockwise. This will remove bias for the output stage. Also, safety is paramount. Wrap any live terminals with insulating tape before starting. Now connect a speaker to one channel and feed in an appropriate signal. Turn on. After a few seconds sound should emanate from the speaker. It should sound distorted though because of the lack of output bias. If on the other hand a loud hum is heard switch of immediately you have a wiring fault that needs correcting. Assuming that all is well adjust the input signal to a low level. Slowly turning the preset counter clockwise will result in the distortion disappearing. Do not adjust the preset beyond this point. Now repeat the process with the other channel. The amplifier is now ready for use.

After all the work were the results worth it? Definitely. The amplifier has a detailed and lucid sound and is trouble-free in operation. Several versions have been built and are giving good service to their owners. For myself I have built many amplifier circuits over the years but this one is my favourite combining valve sound with the audio muscle of a big solid state amp.

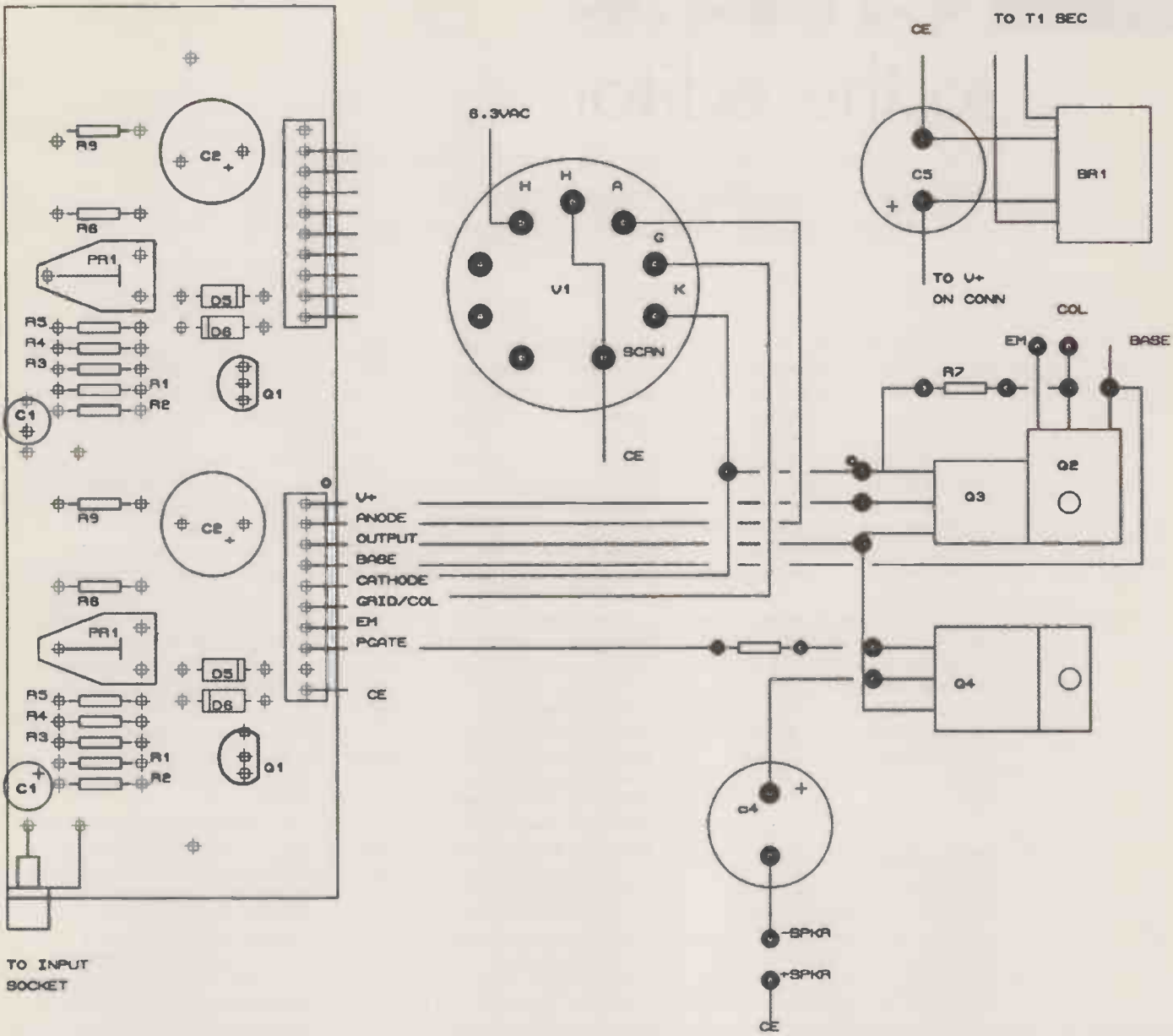

Figure 3

Parts list

Resistors, all 0.5W 1%
(unless indicated)

R1	56k
R2	12k
R3	820k
R4	3.6k
R5	6.2k
R6	120
R7/8/10	680
R9	1k

Capacitors

C1	10mF 50V
C2	100mF 100V
C3	deleted
C4/5	4700mF 100V

Active devices

V1	ECC88
Q1	2SC2547E
Q2	BD139
Q3	IRF640
Q4	IRF9640
D1/2/3	1N4001
D4	3mm LED
BR1	400PIV, 3A bridge

Miscellaneous

30-0-30VAC SEC 160VA mains transformer
6-0-6VAC SEC 20VA mains transformer
PCB
2 off 10way PCB plugs/skts
Phono input sockets
Case
Heatsink
B9a valve sockets
Capacitor clips
T0220 mounting kits

There will be a kit available for this project, which you can order through EW. The cost is £95 + post and packing and includes gold plated sockets, valves and all hardware except wiring. Interested readers, please contact Caroline Fisher (details on page 3) who will give you ordering information.

LETTERS to the editor

Letters to "Electronics World" Highbury Business Communications, Nexus House, Azalea Drive, Swanley, Kent, BR8 8HU
e-mail EWletters@highburybiz.com using subject heading 'Letters'.

Airborne lasers

Re: your sense of wonder as to why CD/MD/DVD players are banned on some flights - well, the answer is that most modern aircraft use Ring Laser Gyroscopes and that there is a remote possibility that laser light could escape from a CD player, bounce around the cabin and end up interfering with the Gyroscope. A pilot assured me that it is a remote possibility, but never the less a real possibility. So now, the next time you are at 40,000ft and the passenger next to you pulls out a bashed up CD Walkman, seek assurance from the cabin crew that the aircraft is using an old type spinning top - I know I do!

Edward Phelan
Dublin
Eire

CE marking

In response to a call for a 1-2 page article on CE marking as raised on page 51 of your letters page in the Jan 2004 edition of *Electronics World*, I would propose this for a starter for 10. I did not go into specific detail with regard to what you could be expected to do to comply with the directives (A blow by blow of the LV directive could be useful to your readers) with relation to electronic products.

CE marking relates to most products placed on the market in the European Community and European Economic Area (EEA, e.g. Switzerland). A number of industries are exempt and non EU nations are also rapidly adopting EU directives as the basis of their own national product safety standards. A correctly drawn 'CE' mark must be affixed on the product and/or it can be placed in the manual or on the packaging. If in doubt do all three!

CE marking also applies to any products made outside the EU and EEA but are imported and sold within it. **The importers** will be prosecuted should imported products not comply, **not their supplier**, against whom there is likely to be little jurisdiction or remedy. An example would be a 'British' product precisely copied by a 'low wage' economy including a printed CE mark (originally obtained through rigorous testing). This 'copy' may be made of unsuitable materials posing a fire hazard (failing the Low Voltage Directive for starters), which was not present in the correctly CE marked original. A copied CE mark is no defence, it's a fraud, and you are selling something that is not as described, it devalues the CE mark.

CE marking is self-certifying (you can do it yourself), by writing a technical file and carrying out applicable tests documented in that file to which you can satisfy yourself and any inquiring body. CE marking covers a multitude of directives, particularly it relates to the EMC, Low Voltage and the Machinery Directives. Further to this there are directives for toys and other product specific areas and locating all pertinent standards is a major challenge.

By affixing the CE mark you indicate that your product is compliant with all directives for that product. Affixing a CE mark because your gas cooker complies with directives relating to gas appliances without considering EMC, Low Voltage and Machinery Directives for its electronic timer is incorrect. Ideally there should be a list of all standards that are complied with in the manual or on the product.

The Machinery and Low Voltage Directives are best suited to self-certification. This is achieved by the production of a comprehensive technical file addressing issues such as Overload, Fire, Electrocution, Mechanical hazards and other less common hazards (e.g. ionising radiation) for the product in 'normal operational mode'. The same concerns must be addressed for the product undergoing 'reasonable misuse'. Finally the product must not pose a hazard during all 'reasonable' failure modes.

The EMC directive is much harder to self certify, without recourse to expensive equipment, and it generally is done through a certified agency whose report will be added to the product technical file.

CE marking is comprehensive and a positive exercise in satisfying yourself that the product you sell is safe to the highest standards of the day. Beware the future however, the lawyers of the EU are busy changing and adding new directives, 'CE' should really be known as 'CC', Continuously Complying.

Peter Knight, MA, MEng Cantab, MIEE
Hertford
Hertfordshire
UK

Errata

The MAcroscope

Some errors crept into the above article in our November 2003 issue, namely:
page 22: Fig. 1. (3x3mm). The unit isn't millimetre but micron (micrometre).
page 23: 7th row from the end. The same as above: 20mm should be 20 micron.
page 27: 12th row from the end of page:..., so that at the scan end the sample results are slightly damaged... In this sentence "results" is used to be a verb with the meaning of "is", so the word 'are' should be removed.
Finally, in all formulas, subscripts are transformed in superscripts, so that, very often, simple indexes can be interpreted as exponents, making more difficult to understand the whole article.

Manually controlled digital pot

The author tells us of an error in his *Circuit Idea*, January 2004: Pin 1 of IC2 appears on both sides of the square. It should be pin 8 that is adjacent to pin 4 at +5V potential; pin 1 is at ground level.

Pedants unite

I read '*Electronics World*' in the belief that the facts contained there in are accurate. I was amazed to discover whilst reading about 802.11 technologies (*EW* Jan 2004) that there were 8 weeks or more in any February.

As I am 70 years of age, I appear to have lost 280 weeks or more (over 5 years) of my life. '*Lost Weekend*' doesn't come near it.

Colin Long
Chigwell
Essex
UK

Any reader who successfully works what our Mr. Long is on about will receive a special editor's prize. – Ed.

Pedant club

With regards to editors comments - Jan 2004 edition:
"...good old WW days, there were less errors"
Surely that should have been "fewer".

Paul Bartlett
Wotton-under-Edge
Gloucestershire
UK

You need to get out more. – Ed.

Cover photo

Just as a final postscript to the saga (Jan 2004) of the 'Cover Photo Mystery', do you not think the final editorial comment "Well that just about settles it, we all thought it was of Florida etc" was just a tiny bit Captain Mainwaring, Dad's Army in that he would say to mostly Wilson or Pike...

"I was just waiting to see how many of you would spot that"...

Next time have the courage of your convictions... have you been taking too much notice of the PC prompt "Do you really want to ...etc?"
Keep up the good work.

Dave Porter
G4OYX
By email

Thing is though, if I had wrongly identified the area – can you just imagine the size of the mailbox? The thing not to do is to use 'royalty free' images where there is no description of what it is. A false economy. – Ed

Cathode Ray

With regards to articles by Cathode Ray, in part the work has been carried out by Cathode Ray himself. He is the author of a more than 400 page book, *Second Thoughts on Radio Theory*, published in 1955 for *Wireless World* by Iliffe & Sons, Ltd

The book is a collection of forty-four articles by Cathode Ray which appeared in *Wireless World* between 1934 and 1954.

Francesco Bracchi
Milano
Italy

Cathode Ray 2

Two collections of Cathode Ray's prolific contributions to Wireless World were published long ago: *Second thoughts on radio theory* and *Essays in electronics*: some further thoughts by Cathode Ray, M. Scroggie, Iliffe Books 1963.

John Crabtree
Minneapolis
MN
USA

Cathode Ray 3

I read the letter from Frank van Vloten about a book of Cathode Ray's articles with interest. You are aware that M.G. Scroggie published a book called *Essays in Electronics* in 1963? This was 22 chapters, each a revised version of articles which he published in *Wireless World*. This was the second book of his, the first was *Second Thoughts on Radio Theory* published in 1955.

M.J. Powell.
Knutsford
Cheshire
UK

Devalued degrees

Before rushing into print to attack me Steve Green might have done better to read my letter a little more closely. Had he done so he might have realised that I was trying to point out that electronics, engineering and applied science and technology degrees are not sufficiently valued in comparison with law and human and animal medicine, even though they can all be considered as essentially vocational. They suffer still further in comparison with degrees in the arts and humanities. Being able to spout poetry or quote Shakespeare is taken as a sign of being educated; being a competent mathematician is not. That is because in England science and technology are not considered as being in any sense a part of the cultural life of the nation.

That the intellectual demands of some degrees are different from others, that universities differ in prestige and that people will make their own private judgements about both these observations, are hardly new phenomena. They have been with us for a long time. Instead of lamenting the loss of exclusivity that a widening of access to degree courses has brought we have to learn to live with the realisation that in England we have first, second and third tier universities. So does the USA and it does not seem to affect

Digital TV

This letter is a follow-up to one sent earlier in the year on digital TV. I have been doing a little research and have come up with something that appears to be quite staggering. The subject, Teletext, or more precisely, the hidden data content of the Teletext transmission.

The above mentioned data stream contains Programme distribution Control (PDC), the time and programme name. These being a very small subset of the total content, much of which isn't used. PDC is the means by which most modern video recorders change the recording start and end times to match a change in broadcasting schedule. The time is used to set the clock automatically on initial switch on, or after a power failure. The programme name is stored by some video recorders to quickly identify the tape content (presumably, DVD recorders make use of the same).

What I am struggling to come to terms with is, when analogue is finally switched off, so will these features. Isn't digital television supposed to be an improvement? Isn't it supposed to 'enhance our experience'? I would say that removing a whole load of features is a step backwards, neigh, a giant leap backwards.

I would be very interested if any other readers have any more information or views on the subject.

Alan Jones
Nottinghamshire
UK

I don't think digital TV was ever supposed to be an improvement in quality. An improvement in the coffers of governments who can then auction off the freed spectrum – possibly. As I've said before, I personally find the compression artefacts of digital TV more disturbing than analogue artefacts, like a spot of noise or some minor ghosting. The fact that the picture regularly goes very blocky when we run out of data (I know only for a split second), I find very annoying. To be fair, it can only get better. DVDs are not that much faster in terms of data throughput, but TV has to be 'live' and so has to rely on compression boxes that work in real time. DVDs of course have the benefit of less than realtime and multipass encoding which gives a far better result. Squeezing more silicon in will ultimately improve DTV. But back to the point, PDC type information is transmitted in the digital domain on a data carousel within each multplex. In the not too distant future later generation set-top-boxes will be able to display EPGs (electronic programme guides) and the next generation of STBs will have hard drives in them to record any programme you fancy, and will be able to 'learn' your favourites and record stuff without you asking, all powered by this data. Interested readers should download the excellent Softel FAQ sheet at: www.softel.co.uk/downloads/Softel_DVB_Object_Carousel_FAQ.pdf – Ed.

that country's ability to produce first class science and technology.

Dr Les May
Rochdale
Lancashire
UK

Reflections on filters

It is very surprising to come across an item by Cyril Bateman that contains a minor error. Even more so to find statements that are dangerously misleading. Yet these take a prominent place in his letter on the subject of EMC Filters (*EW* Jan 04). Cyril assures us that EMC Filters do not create interference and that it is essential for them to reflect energy back into the transmission line with which they interface.

An efficient filter will transmit the wanted energy with minimum attenuation and will provide a high attenuation to unwanted energy. There are two options for dealing with the unwanted energy:

1] reflect it back into the line.
2] absorb it.

If it is reflected back into the line, then where will it go?

A step voltage will travel along the transmission line at near-light speed, until it reaches the far end. If the termination is inductive or open-circuit, the voltage will be doubled, and reflected back into the line. If the termination is capacitive, then any step change in the current will be doubled and reflected back down the line, just as though it had met a short-circuit.

The net result is that a pulse of energy will reverberate backwards and forwards along the transmission line. Anyone who has monitored the voltage across the terminals of a switch will have observed the damped cosine wave which results when it changes state. The puzzling thing is the rate of decay, which cannot plausibly be explained by the action of conductor resistance or dielectric conductivity. The relatively rapid decay of the ringing pulse can only be due to the fact that energy is radiating away from the line.

This should be no surprise, when the field pattern of a twin-conductor cable is brought to mind. Both the electric and magnetic fields extend into the far distance. Although the transmission line is not intended to be an antenna, that is exactly how it behaves.

If the action of the filter is to reflect spurious energy back into the transmission line, then that energy will be radiated into the environment. In my book, the propagation of unwanted electromagnetic energy into the environment is synonymous with the emission of interference. The filter will create a high level of interference. Any equipment in the vicinity of the cable will be under threat.

But that is not the only problem. Heavy-duty mains filters incorporate relatively large capacitors, and the switch-on surge is capable of tripping the 'residual current' circuit breaker. In these cases, the approved 'solution' is to incorporate a delay of up to three seconds into the operation of the breaker. What protection is that? A great number of milli-joules can be delivered to someone who happens to be touching the live conductor during those few seconds.

There's more. A filter assembly composed of L-C components will resonate at some frequency. If the frequency of the interference happens to be close enough to excite this resonance, then the filter will amplify the unwanted signal, possibly by as much as 30dB. In these circumstances, anyone close to an electro-explosive device 'protected' by such a filter has every right to be nervous.

The approved tests for filters are designed to obscure the resonant peaks in the filter response, since they include a series resistance of 50 ohm, rather than the more realistic value of 0.5 ohm. A common source of interference is the switched socket on the wall. If this happens to be connected via a mains cable to a personal computer, then the switch-on surge will be reflected back into the National Grid by the filter at the computer input plug. Any other computer in the vicinity of the mains wiring will experience the resultant burst of interference. Since the microchips in computers are sensitive to tiny transients, is it possible to guarantee that none of them will be affected? Is it any wonder that error-correction software is an essential feature of computer design? Is the situation getting worse, or better?

Since EMC filters are devices used to minimise interference, it is reasonable to expect them to play their full part in performing that function. As well as protecting the equipment they interface with, they should also absorb the unwanted energy. They should not reflect anything.

I am not advocating more legislation. There is enough of that already. I am suggesting that we, as engineers, should be willing to build EMC filters that play their part in keeping the environment clean. There are knock-on benefits. The adjacent environment would also be clean, minimising intra-system interference. EMC, system performance, and safety would be improved. Risk of litigation would be reduced. Hyper-expensive EMC tests could be eliminated. Overall cost savings could be very significant.

Nor should the task be impossibly difficult for any reader of *Electronics World*. The basic requirement is for the filter to present a resistive load to the line, of a value equal to its characteristic impedance, over the applicable range of frequencies. The only components capable of maintaining a reasonably constant impedance over a wide range of frequencies are resistors.

Ian Darney,
Bristol
U.K.

Ellis responds

Mr. Aylward's recent letter (*Electronics World*, Dec. 2003) was rather disingenuous. He implies that one of your correspondents may have

Transistor Nomenclature

Knock me over with a feather!
You are quite right in believing that you are not the only one who has always thought the first character was a letter 'O' rather than a zero. But see the attached images I have scanned from the Mullard data books for 1969 and 1976. Now my eyes aren't what they used to be, but those are letter 'O's aren't they? Seems the good people at Mullard were under the same illusion!

David J. Sweeney
Surrey
UK

OLD SYSTEM

Earlier semiconductor devices have type numbers consisting of two letters followed by two or three figures.
The first letter is 'O', denoting a semiconductor device.
The second letter indicates the general class of device:

A	diode or rectifier
C	transistor

The group of figures is a serial number denoting a particular design or development.

Examples:

OA91	Semiconductor diode
OC170	Transistor

OLD SYSTEM

Some earlier semiconductor diodes and transistors have type numbers consisting of two or three letters followed by a group of one, two or three figures.
The first letter is always 'O', indicating a semiconductor device.
The second (and third) letter(s) indicate the general class of device:

A – diode or rectifier C – transistor
AP – photodiode CP – phototransistor
AZ – voltage regulator diode

The group of figures is a serial number indicating a particular design or development.

been inebriated and that there may be people exploiting measurable characteristics as a means to overcharge. I suspect that the former is untrue and certainly if applying to myself the latter would be false. Such comments as these are mischievous nonsense.

Dealing with Mr. Aylward's criticisms of a technical nature, I am pleased that he at least acknowledges that some Miller designs may have been poor. He continues, however, that the Miller effect issues I raised have been and are well known to many. I am sure they are, but I will return to this later. He mentions Mr John Linsley Hood, but even JLH was prepared to accept that there may have been some unexplained differences between amplifiers which the ear could detect but nothing specifically attributed to anything that could be measured at the time. I am not making the assertion that input spikes caused by transients are audible, only that they could give rise to non-linearities which may explain audible differences between amplifiers for which very high performance data can be furnished based on continuous sine wave or "static" (perhaps quasi-static) signals.

Mr. Aylward says that it is a "very well known error" to compare the open and closed loop gains to obtain the loop gain. By definition, the closed loop gain is the open loop gain, let us call A, divided by the sum of the loop gain, AB, where B is the attenuation of the feedback loop, and 1. I hope Mr Aylward will agree that this basic tenet is not in error, or we will all have to throw out our feedback theory books and start again. What seems to be the concern is whether the forward gain A, and feedback factor B, can be accurately determined. Mr Aylward refers to Dr. Middlebrook's web site, but failed to reference any specific paper. Dr. Middlebrook's work seems to be geared at methods for keeping the maths simple in what is actually a rather complex problem of analogue design. One paper which Mr Aylward may have had in mind was on making loop gain measurements[1]. The abstract suggests that the loop ought not to be broken particularly for high gain amplifiers. I have not read that paper, but a common technique for measuring loop gains is shown in figure 1 which I presume originated from Dr. Middlebrook's work.

For an amplifier with an open loop gain A (control theorists would call this the 'forward path') and inputs V1 and V2, the output V0 = A(V1-V2). A feedback loop has a function B, and a disturbance V is injected into the loop. We can write the effective output voltage V0' = V0+V. Hence V2 = B(V0+V) V0=A(V1-B(V0+V)) For loop gain measurements V1 is usually set to zero, so V0 =-AB(V0+V) =-ABV0' Hence measuring V0 and V0' gives the loop gain, AB, directly.

The concern I believe Mr Aylward has is whether A and B can be determined accurately for an amplifier. The beauty of using a simulation is that all of the transistors making up the amplification block described by A can be accounted for. In this respect a simulation is potentially able to reveal far more than input-output measurements. Every transistor has several capacitances associated with it, some of which cause unwanted feedback, but all these, for all the transistors, will be included. Feedback theory tells us that however many poles and zeros are included in the forward path A, the closed loop gain is still determined by the basic equation.

In order to simulate the open loop gain, where the feedback loop is broken, I first perform a simulation to establish the DC conditions for a given circuit. Then, because I wrote the simulation, I am able to save these conditions for all of the transistors and modify the coefficient matrix just to remove the feedback resistor. Nothing else changes in the amplifier. There is nothing in the models which would suggest that a different result can be obtained by simulating the loop gain directly: the transistors do not 'know' that they have to behave differently on closed loop than on open loop. If A can be calculated accurately, then comparing the open loop and closed loop gains and phases leads to the ratio (1+AB). This leads to the identical result AB, as before, the loop gain. Commercial simulators I imagine would have trouble with the DC conditions if the feedback resistor were removed. This seemed such an obvious approach (and familiar to me) that I overlooked this advantage in responding to Mr. Aylward's first letter.

I will add one caveat to the last paragraph, and that is that small-signal simulations do not necessarily give the full picture of an amplifier. In a class B circuit, the driver and output transistors operate over a very wide dynamic range of currents, and therefore a small signal simulation has to be used with a certain degree of caution. At low currents, the driver/output transistor gain and frequency response may be low. At medium currents, these parameters

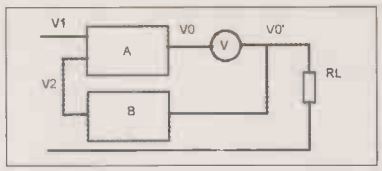

Figure. 1: Setup for Loop Gain Measurement

may be near their maximums, while at high currents they may once again be lower. Using FETS in the output stage may afford some advantages in this respect. In simulating a class B amplifier, I sometimes set the output stage conditions according to a nominal mid-level output current, perhaps 1A, as though one transistor were in Class A, with the other half acting only as parasitic capacitive loads. This again is possible with one's own simulator! If a commercial simulator is used to generate a frequency response using the DC conditions, the results may pertain only to those conditions (e.g. quiescent values) and may not be the same at high output levels. There is therefore a case to check the simulations using currents corresponding to low, medium and high outputs rather than under one specific condition, or to use a full transient mode simulation. It may be that the driver transistors can contribute parasitic oscillations in a Class B stage. Professor Cherry mentioned this problem in previous articles[2]. However, I stated that this was one reason why it is necessary to connect the NPN and PNP driver emitters together with a capacitor. This is perhaps one reason for choosing NPN/NPN and PNP/PNP output pairs rather than complementary feedback pairs.

For the record, I simulated the open loop gain by breaking the loop as shown at X in fig. 2. It could also have been broken at Y - as far as my simulations are concerned, the feedback resistor vanishes. However, I admit that I did not rebalance the impedances! Rf should have included another Rg, and arguably Rg should have been paralleled by another Rf. The resulting effects on Rf and Rg are trivial, and I doubt they will make any effective difference to the stability calculations.

In another letter, Mr. Ken Hughes (*Letters*, August 2003), stated that the PLIL amplifier was stable when he simulated it using PSPICE. This is a welcome input to the debate and concurs with my results. Let me remind readers why I started the exercise. I began by investigating why Dr. Bailey's 1968 amplifier (at that time this design was better than most of its contemporaries) was stable when a medium-signal transistor (40361) was used for the input

stage rather than a small signal one (e.g. BC307B). I showed that the higher frequency response of the small signal transistor lead to instability without a much larger input resistor, or PLIL approach. My simulations confirmed both the problem (even that the original transistor may have needed a slightly larger input resistor) and solution. In Mr. Hughes's letter, he asks whether a smaller input capacitor can be used to improve the 'static' distortion levels. Unfortunately, practical results indicate that unless the input phase lag capacitor is large enough, around 1nF, it does not provide the necessary stability. Therefore I can accept that the PLIL approach requires a suitable input capacitor, but not that it is unstable per se. If Mr Aylward has any evidence to the contrary perhaps he would enlighten us.

Taking up the comparison between the PLIL amplifier and the Miller compensated amplifier, I reject the notion that this was comparing apples and oranges. I specified the parameters used for each amplifier, thus providing enough information for anyone to repeat the experiment. Mr Aylward says that the Miller design was "bad" but fails to offer any justification. Better 'static' distortion characteristics could have been demonstrated if the input emitter resistors had been lower. However, the components and currents I specified were aimed at preventing the Miller design from overloading under normal input voltage levels at any frequency. Further, the slew rate limit, being set by the input stage current and Miller capacitance, is given by the ratio of 6mA/47pF, compared with a more usual 2mA/150pF. This is nearly 10 times faster slew - on paper - for the same frequency response. The use of even higher input currents was advocated by Stochino[3] for a "non-slewing" amplifier, which seems to offer the best of all worlds - high open loop gain and potentially no input stage overload. Perhaps this is what Mr Aylward alludes to.

Mr Hughes also showed that we needed four times more gain in the PLIL amplifier to match the Miller results. My experimental data seems to support this too: in my comparison, the Miller open loop gain was three times down on the PLIL, but the THD I reported was still marginally better on the Miller design, as Mr Aylward was quick to highlight. However, Mr Aylward misses the main point - my fault for not reminding readers - that it was

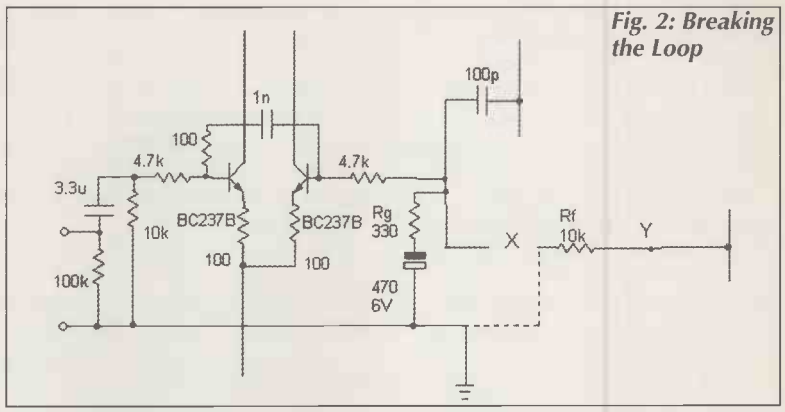

Fig. 2: Breaking the Loop

not "static" linearity (that is continuous sine waves) that I was concerned with in the PLIL approach, but transient. This is where the PLIL appears to have some merit.

Returning to the original point about being "well known" and a "dead issue", of course the Miller method of stabilisation is well known. Whether it is a "dead issue" or not depends on the particular conditions under which an amplifier operates. There is a risk that some may overload under fast transient conditions if the input stages are not right. Designers have the option to make this a dead issue by suitable input design; or they may rely on some bandwidth limitation elsewhere, much as I said in my previous letter. In which case it seems to me to be vulnerable. Mr Aylward mentions the MOSFET 1000 amplifier he designed as having 200kHz bandwidth and states that it needed no input filter. Certainly for stability it should not; but whether it is fast transient-proof cannot be concluded from his comments, although he hints that it is. Perhaps there is some rule that says power amplifiers should have a 200kHz bandwidth requirement for all audio signals. I also said in my previous letter that popular signal sources are unlikely to exceed this, but that this should be re-quantified. There has been some discussion on bandwidth fairly recently, with still no definitive statements unless I missed something, apart from a letter many years ago suggesting a 150kHz requirement. 200kHz, however, has a safety factor of 10 times over the accepted audio band and would seem to be a reasonable proposal, if it is agreed that signal sources will not or do not exceed this. Even if true, I suspect that this will not stop commercial pressure to increase amplifier bandwidth etc.

Finally, Mr Aylward says I should "check my facts". The conclusions I reached were based on the evidence available to me. The majority of audio amplifiers now in car radios, CD players, portable and compact audio systems, TVs and so on are ICs. Of those where I have seen the circuits published, some designed within the last 10 years, none have included any input stage emitter degeneration resistors. It seems though that manufacturers are now more reluctant to provide circuit details. Without emitter degeneration, they could be prone to input stage overloading. Perhaps filters from IF stages or for CD digitisation may prevent this. For amplifiers where FET input stages have been used, if the DC gate bias voltage is greater than the maximum input stage signal voltage, they should have some immunity from hard overloading too. Contrary to the impression Mr Aylward is painting, I based my comments on the Miller stabilisation method out of a concern that there appeared to be SOME designers who were or are not aware of the consequences, not to castigate professional designers who are familiar with the method and drawbacks. I have no doubt that there are many competent and some brilliant IC designers too. I would like to believe that all students, however, are taught about the consequences of Miller capacitors and not just that they are a theoretical solution to an unstable amplifier problem. Classical feedback theory would not necessarily highlight transient overloading (though simulations can). On that point, I truly hope my concerns can be allayed.

John Ellis

References

1. Middlebrook, R.D., Measurement of Loop Gain in Feedback Systems, *Intl. Journal of Electronics*, vol.38, no. 4, 1975.
2. Cherry, E.M. Ironing Out Distortion, *Electronics World*, July 1997
3. Stochino, G., Non-Slewing Audio Power, *Electronics World*, March 1996.

Network Analysis

I read with interest the article on Network analysis by John Ellis (*EW* Feb '04). The matrix shown in fig. 4 is a matrix of admittance values derived from the circuit. Admittances, rather than impedances must be used, as if there is no connection between two nodes then the admittance of the path is zero, whereas the impedance would be infinity – a difficult value for the computers to handle. Including the common line, there are eight nodes in the example of fig. 3. Adding this node in to the admittance matrix produces an 8x8 matrix, known as the 'Indefinite Admittance Matrix', which has the unique property that the sum of any row or column is zero. This matrix can then be reduced to a 2x2 matrix by equating all internal currents to zero, from which the conventional 'black box' parameters of the network may be derived; i.e., gain, phase shift, input and output impedances. The solution described is well known and readers may be interested to know that an article about this appeared in *Wireless World* many years ago, together with a software implementation in BASIC. ('Circuit Analysis by Small Computer' by A.S. Beasley – *Wireless World* Feb. & Apr. 1980).

Programming languages which do not support complex numbers as standard – such as Pascal – can declare a record containing two floating-point numbers, to be used as the real and imaginary part of a complex number. It is then relatively straightforward to add subroutines to implement the required complex number functions. For a good example of a linear circuit analysis program using these techniques and also for loudspeaker response analysis, see the site at www.bells-hill.freeserve.co.uk

Peter M. Montgomery
Slough
Berkshire
UK

Help wanted: Stochino Audio Amplifier

Does anybody have a spare set of PCBs for the "Ultra fast Audio amplifier" by Stochino that was published in EW August1998? Or know where I might get some?

Friedrich Rolle
layout@surfeu.ch

New home wanted for old electronics magazines

Some months ago we mentioned that we were getting a pile of old electronics magazines from a deceased reader – well we've finally sorted them all out. We've decided to keep the WWs and EWs for our own archive (as some have gone missing) for the moment, but we have the list below available on a first come first served basis. We will post to UK addresses for free – and overseas readers at cost – let us know what you need. Thanks to the estate of Mr. M. S. Dunn for allowing us to offer these.

Title	Months	Year
Practical Electronics	Nov-Dec	1964
Practical Electronics	Jan-Jun	1965
Practical Electronics	Aug-Dec	1965
Practical Electronics	Jan-Aug	1966
Practical Electronics	Oct-Dec	1966
Practical Electronics	Jan-Feb	1967
Practical Electronics	Apr	1967
Practical Electronics	Jun-Dec	1967
Practical Electronics	Jan-Dec	1968
Practical Electronics	Jan-May	1969
Practical Electronics	Jan	1970
Practical Electronics	Mar	1970
Practical Electronics	May-Aug	1970
Practical Electronics	Nov-Dec	1970
Practical Electronics	Jan	1971
Practical Electronics	Mar	1971
Practical Electronics	Jun	1971
Practical Electronics	Aug	1975
Practical Electronics	Mar-May	1977
Practical Electronics	Sept-Oct	1977
Practical Wireless	Jun	1964
Practical Wireless	Nov-Dec	1965
Practical Wireless	Jan-Mar	1966
Practical Wireless	Nov	1966
Practical Wireless	Apr-Jun	1967
Practical Wireless	Aug	1967
Practical Wireless	Nov-Dec	1967
Practical Wireless	Oct	1968
Practical Wireless	Sept	1969
Practical Wireless	Mar	1970
Practical Wireless	Oct	1976
Practical Wireless	Mar-Jul	1977
Practical Wireless	Sept-Oct	1977
Practical Wireless	Jul	1978
The Radio Constructor	Oct-Dec	1962
The Radio Constructor	Aug, Dec	1963
The Radio Constructor	Jan-Feb	1964
The Radio Constructor	Sept, Nov-Dec	1964
The Radio Constructor	Jan-Oct	1965
The Radio Constructor	Jan-Feb	1966
The Radio Constructor	May-Jul	1966

The Electronics World Book Service offers access to our team of specialist publishing experts. We can order any book or CD-ROM currently in print from *War And Peace* to the *Reference Data for Engineers*. All books are delivered free of charge within the UK unless otherwise stated. Order form opposite.

If you are ordering by credit card, need further information, or would like to use our search facilities, call
01737 812727 Fax 01737 813526
The order/helpline is open from 9am to 5pm, or leave your order on our out-of-hours answerline or email us at *salesteam@boffinbooks.demon.co.uk*
When placing orders please quote
● Name ● Address (home & delivery) ● Daytime telephone number ● Debit/Credit card number ● Expiry date ● Details of order. Please note prices may change, but are correct at time of going to press.

NEWNES GUIDE TO RADIO AND COMMUNICATIONS TECHNOLOGY

Ian Poole

This is a guide to the technology and applications of modern radio and communications equipment. The author's approach provides a useful foundation for college students and technicians seeking an update on the latest technology.

Jul 2003 ▲ 352 pages ▲ Index ▲ PB
Published in UK
Code 0-7506-5612-3 **£16.99**

DICTIONARY OF VIDEO AND TELEVISION TECHNOLOGY

Jack Tsatsoulin

This work provides comprehensive and contemporary information on the essential concepts and terms in video and television, including coverage of test and measurement procedures. The CD accompanying the text includes an electronic version of the book.

Sept 2002 ▲ 365 pages & CD-Rom
Published in UK
Code 1-87707-99-X **£29.99**

TCP/IP EMBEDDED INTERNET APPLICATIONS

Edward Insam

This text highlights an engineer's approach to Internet protocols and applications, reducing R&D time for engineers. The book aims to be the main design guide for the cutting edge of Internet-enabled electronic products and systems.

Aug 2003 ▲ 384 pages ▲ Index ▲ Appendix
PB ▲ Published in UK
Code 0-7506-5735-9 **£32.50**

ELECTRONIC CLASSICS: COLLECTING, RESTORATION AND REPAIR

Andrew Emmerson

This text encompasses all aspects of buying, collecting, restoring, repairing, sourcing parts, professional services, clubs and societies. The first part covers technical aspects of restoration and details where components can be found. The second part presents useful information for collectors.

Aug 1998 ▲ 256 pages ▲ Index
10 halftones ▲ 50 line illustrations ▲ PB
Published in UK
Code 0-7506-3788-9 **£21.99**

INTRODUCTION TO DIGITAL SYSTEMS

John Crisp

This self-study text introduces digital electronics from first principles, before going on to cover all the main areas of knowledge and expertise. It covers the practicalities of designing and building circuits, including fault-finding and the use of test equipment.

Feb 2000 ▲ 302 pages ▲ Glossary ▲ Index
PB ▲ Published in UK
Code 0-7506-4583-0 **£18.99**

NEWNES DICTIONARY OF ELECTRONICS

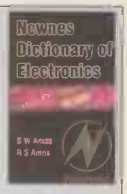

S W Amos; R S Amos

Aimed at engineers, technicians and students working in the field of electronics, this dictionary provides clear and concise definitions, including TV, radio and computing terms, with illustrations and circuit diagrams.

4th edition ▲ Mar 2002 ▲ 394 pages
100 illustrations ▲ PB ▲ Published in UK
Code 0-7506-5642-5 **£12.99**

NEWNES GUIDE TO TELEVISION & VIDEO TECHNOLOGY

Eugene Trundle

An exploration of television and video technology. It covers the fundamentals of digital television (satellite, cable and terrestrial) and digital video, as well as providing a grounding in analogue systems.

3rd edition ▲ Feb 2001 ▲ 432 pages ▲ Index
PB ▲ Published in UK
Code 0-7506-4810-4 **£17.99**

NEWNES GUIDE TO DIGITAL TV

Richard Brice

Covering all aspects of digital television, this text encompasses the electronics of the equipment, data compression, television production, servicing and the different transition methods - terrestrial, satellite and cable. The text has been updated with developments since the 2000 edition.

2nd edition ▲ Oct 2002 ▲ 304 pages ▲ Index
45 illustrations ▲ 15 photographs ▲ HB
Published in UK
Code 0-7506-5721-9 **£24.99**

PRACTICAL ELECTRONIC FAULT FINDING AND TROUBLESHOOTING

Robin Pain (Design Engineer, Cotag International Ltd)

A text using simple circuit examples to illustrate principles and concepts fundamental to the process of analog and digital fault finding. It aims to help the reader tackle any job, from fixing a TV to improving the sound of a hi-fi. A digital multimeter and oscilloscope are needed for these jobs.

Apr 1996 ▲ 284 pages ▲ Index
50 line illustrations ▲ PB ▲ Published in UK
Code 0-7506-2461-2 **£21.99**

PRACTICAL ELECTRONICS HANDBOOK

Ian Sinclair

A collection of all the key data, facts, practical guidance and circuit design basics needed by a spectrum of students, electronics enthusiasts, technicians and circuit designers. It provides explanations and practical guidance, and includes new sections on SHF techniques and intruder alarms.

5th edition ▲ Feb 2000 ▲ 571 pages
Illustrations ▲ PB ▲ Published in UK
Code 0-7506-4585-7 **£16.99**

RSGB RADIO & ELECTRONICS COOKBOOK

Radio Society of Great Britain

Only a basic knowledge of electronics is assumed for this collection of electronics projects, and it is ideal for all electronics and DIY enthusiasts and experimenters. Designed by the RSGB, the UK radio amateurs federation, the projects are clearly explained step by step.

Nov 2000 ▲ 336 pages ▲ PB ▲ Illustrations
Published in UK
Code 0-7506-5214-4 **£17.99**

REFERENCE DATA FOR ENGINEERS: RADIO, ELECTRONICS, COMPUTERS AND COMMUNICATIONS

Mac E Van Valkenburg; Edited by Wendy Middleton

Written by professionals for professionals, this is a complete reference for engineers, covering a broad range of topics. As well as addressing radio technology data, it covers digital electronics, computers and communications.

9th edition ▲ Aug 2001
1568 pages & CD-Rom ▲ 1385 line illustrations
HB ▲ Published in UK
Code 0-7506-7291-9 **£90.00**

FUZZY LOGIC FOR EMBEDDED SYSTEMS APPLICATIONS

Dr Ahmad Ibrahim

Written by a recognised expert in the field, this covers all the basic theory relevant to electronics design, with particular emphasis on embedded systems. It shows how the techniques can be applied to shorten design cycles and handle logic problems that are tough to solve using conventional linear techniques. All the latest advances in the field are discussed, and practical circuit design examples presented.

Oct 2003 ▲ 312 pages ▲ PB
Code 0-7506-7605-1 **£35.00**

ANALOG INTERFACING TO EMBEDDED MICROPROCESSORS

Stuart Ball

Provides hard-to-find information on interfacing analog devices and technologies to the purely digital world of embedded microprocessors. Gives the reader the insight and perspective of a real embedded systems design engineer, including tips that only a hands-on professional would know. Covers important considerations for both hardware and software systems when linking analog and digital devices.

March 2001 ▲ 288 pages ▲ PB
100 line illustrations

Code 0-7506-7339-7 **£19.99**

HANDBOOK OF RF AND WIRELESS TECHNOLOGIES

Farid Dowla (Lawrence Livermore National Laboratory, University of California-Davis, USA)

Subjects covered include third-generation wireless, wireless sensor networks, RF power amplifiers, spread spectrum modulation, signal propagation and antennaes. This is far more than just a tutorial or reference guide — it is a "guided tour" through the world of cutting-edge RF and wireless design, combining theory, applications and philosophies behind the RF/wireless design process.

November 2003 ▲ 720 pages ▲ HB

Code 0-7506-7695-7 **£59.99**

DIGITAL INTERFACE HANDBOOK

John Watkinson, Francis Rumsey

A detailed manual for those who need to get to grips with digital audio and video systems. It sheds light on the differences between audio interfaces and shows how to make devices "talk to each other" in the digital domain. Also includes detailed coverage of all the regularly used digital video interfaces. New information included in this third edition: dedicated audio interfaces, audio over computer network interfaces and revised material on practical audio interfacing and synchronisation.

3rd edition ▲ September 2003 ▲ 392 pages
231 line illustrations ▲ PB

Code 0-2405-1909-4 **£29.99**

TV FAULT-FINDING GUIDE

Edited by Peter Marlow

A distillation of the most-used fault reports from 11 years of *Television* magazine. Arranged by make and model, it features over 200 reports on over 300 models of television, including diagnosis and repair advice.

Mar 2000 ▲ 387 pages ▲ Illustrations
PB ▲ Published in UK

Code 0-7506-4633-0 **£20.99**

VALVE AMPLIFIERS

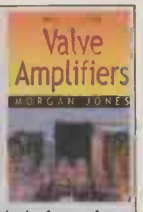

Morgan Jones

The author's straightforward approach, using as little maths as possible, should be of use to those with only a limited knowledge of the field as well as being the standard reference for experts in valve audio. Design principles and construction techniques are also provided.

3rd edition ▲ Aug 2003 ▲ 624 pages ▲ Index
PB ▲ Published in UK

Code 0-7506-5694-8 **£29.99**

VCR FAULT-FINDING GUIDE

Edited by Peter Marlow

A distillation of the most-used fault reports from 11 years of *Television* magazine. Arranged by make and model, it features over 2000 reports on over 200 models of VCR, including diagnosis and repair advice.

Mar 2000 ▲ 447 pages ▲ Illustrations ▲ PB
Published in UK

Code 0-7506-4634-9 **£20.99**

DESIGNING AUTONOMOUS MOBILE ROBOTS

John Halland

Covering topics such as advanced sensor fusion, control systems for a wide array of application sensors and instrumentation, and fuzzy logic applications, this volume is essential reading for engineers undertaking robotics projects as well as for undergraduate and graduate students studying robotic engineering, artificial intelligence and cognitive science. Its state-of-the-art treatment of core concepts in mobile robotics helps and challenges readers in exploring new avenues in an exciting field.

January 2004 ▲ PB & CD-Rom ▲ 352 pages

Code 0-7506-7683-3 **£35.00**

VIDEO AND CAMCORDER SERVICING AND TECHNOLOGY

Steve Beeching

A comprehensive guide to domestic VCR technology and repair techniques. This edition brings the information fully-up-to-date, with expanded coverage of camcorders, sections on DVD equipment and the latest VCR technology.

5th edition ▲ Apr 2001 ▲ 323 pages
Illustrations ▲ PB ▲ Published in UK

Code 0-7506-5039-7 **£20.99**

VIDEO DEMYSTIFIED

Keith Jack

This edition has been updated to include information on digital television, datacasting, interactive video, digital camcorders and VCRs, and video interfacing. Coverage is international, including European, Asian and North/South American video standards, methods and techniques.

3rd edition ▲ Jul 2001 ▲ 784 pages & CD-Rom
References ▲ Glossary ▲ Index ▲ PB
Published in UK

Code 1-878707-56-6 **£50.00**

ANALOG ELECTRONICS: CIRCUITS, SYSTEMS AND SIGNAL PROCESSING

D Crecraft (formerly Open University); S Gergely (formerly University of Coventry)

Designed to complement the digital systems modules and develop the essential skills needed for RF circuit design, this book demystifies the art of analogue circuit design and analysis. The content meets the requirements of first and second year electronics engineering courses.

May 2002 ▲ 435 pages ▲ 150 line illustrations
PB ▲ Published in UK

Code 0-7506-5095-8 **£19.99**

AUDIO POWER AMPLIFIER DESIGN HANDBOOK

Douglas Self

This text on the design of audio amplifiers is based on Douglas Self's work in *Electronics World* magazine and a career at the cutting edge of audio design. This handbook aims to provide a practical guide to the state of the art, and includes detailed design and construction information.

3rd edition ▲ May 2002 ▲ 448 pages
62 line illustrations ▲ Index ▲ PB
Published in UK

Code 0-7506-5636-0 **£24.99**

AVR: AN INTRODUCTORY COURSE

John Morton (University of Cambridge)

AVRs have certain strengths compared to other microcontrollers but are less well-known or understood. The author wrote this guide to introduce AVRs to those who have little or no microcontroller background and to encourage them to start using these useful devices with easy projects to try.

Sep 2002 ▲ 256 pages ▲ 150 illustrations
Glossary ▲ Further reading ▲ Index ▲PB
Published in UK

Code 0-7506-5635-2 **£16.99**

BEBOP TO THE BOOLEAN BOOGIE: AN UNCONVENTIONAL GUIDE TO ELECTRONICS

Clive Maxfield

The second edition of this comprehensive introduction to contemporary electronics now has added material. It is written for the engineer, hobbyist or student who needs a thorough electronics reference, as well as for non-technical people, and is accompanied by a CD-ROM.

2nd edition ▲ Jan 2003
500 pages & CD-Rom ▲ 184 illustrations
187 photographs ▲ Glossary ▲ PB
Published in UK

Code 0-7506-7543-8 **£27.50**

ELECTRONICS WORLD ORDER FORM

Please order or search the following:

Code	Description	Qty	Price
	POSTAGE & PACKING **FREE** IN THE UK*	TOTAL	

Name ..... Daytime Tel .....

Address .....

..... Postcode .....

I enclose a cheque/postal order value £ ..... payable to 'Boffin Books Ltd'

Please debit my Access/Visa/Switch/Delta card (delete as applicable) Issue number (Switch only) .....

Card Number ..... Expiry Date .....

Signed .....

*Postage charges outside the UK available upon request or email: salesteam@boffinbooks.demon.co.uk

Post to: **Boffin Books Ltd, 24 Walton Street, Walton-on-the-Hill, Tadworth, Surrey KT20 7RT, UK**

59

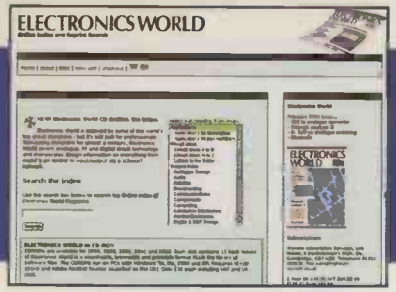

WEB DIRECTIONS

Put your web address in front of 18,000 electronic fanatics.

Electronics World acknowledge your company's needs to promote your web site, which is why we are dedicating 2 pages in every issue to WEB ADDRESSES.

Linage only will cost £150 + vat for a full year.

Linage with colour screen shot will cost £350 + vat for a full year, this will include the above plus 3cm shot of your web site which we can produce if required.

To take up this offer or for more information telephone

Scott Carey

Tel 01322 611292

E-mail

s.carey@highburybiz.com

CHYGWYN

www.chygwyn.com

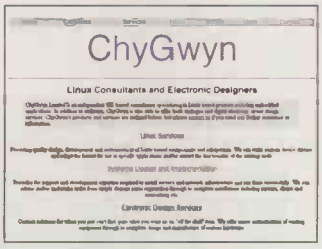

ChyGwyn Limited offers electronic design and embedded software development for remote monitoring, embedded appliances, set-top boxes and similar devices. We are experts in customisation of Linux and write device drivers for custom hardware.

CONFORD ELECTRONICS

www.confordelec.co.uk/index.shtml

Lightweight portable battery/mains audio units offering the highest technical performance. Microphone, Phantom Power and Headphone Amplifiers. Balanced/unbalanced signal lines with extensive RFI protection.

CRICKLEWOOD ELECTRONICS

www.cricklewoodelectronics.co.uk

Cricklewood Electronics stock one of the widest ranges of components, especially semiconductors including ICs, transistors, capacitors, all at competitive prices.

DESIGNER SYSTEMS CO

www.designersystems.co.uk

Electronic product design company with over a decade of experience promoting it's own product range and designing and manufacturing innovative products for client companies/individuals.

DB TECHNOLOGY

www.dbtechnology.co.uk/ EMC Testing and Consultancy.

Anechoic chamber and open area test site.

- Compliance Tests
- Rapid, accurate pre-compliance tests.
- Fixes included. FCC Listed.
- Flexible hourly booking available.

FUTURE TECHNOLOGY DEVICES INTL. LTD.

www.ftdichip.com

FTDI designs and sells USB-UART and USB-FIFO interface i.c.'s. Complete with PC drivers these devices simplify the task of designing or upgrading USB peripherals

GREENWELD

www.greenweld.co.uk

Audio • Batteries & Chargers • Books • Communications • Computer • Cable • Capacitors• Car Equipment • Craft Goods • Disco Equipment • Enclosures • Electrical • Fuses • Graphic supplies • Hardware •Instrumentation • Kits • Lighting Mechanical • Optical • Photographic •Power supplies • Transformers Resistors • Semiconductors • Software • Soldering Irons • Surplus goods • Switches • Relays • Telephone Accessories • Tools • Plus much more.

Whether your interest is in electronics, model engineering, audio, computer, robots or home and leisure products (to name just a few) we have a wide range of new and surplus stock available.

LOW POWER RADIO SOLUTIONS

http://www.lprs.co.uk

LPRS produces radio modules with embedded "easy-Radio" software protocols for short range radio applications. We also represent Circuit Design narrow band modules in the UK.

NORCALL Ltd

www.tetra-com.co.uk

Suppliers programmers and repairers of new and refurbished two-way radio equipment. Retuning and recrystalling service available. All types of batteries chargers and aerials supplied. e-mail Norcall@aol.com

To reserve your web site space phone Scott Carey
Tel: 01322 611292 Fax: 01322 616376

QUASAR ELECTRONICS
www.QuasarElectronics.com

Over 300 electronic kits, projects and ready built units for hobby, education and industrial applications including PIC/ATMEL programming solutions. Online ordering facilities.
Tel: +44 (0) 870 246 1826
Fax: +44 (0) 870 460 1045
Email: sales@QuasarElectronics.com

SOFTCOPY
www.softcopy.co.uk

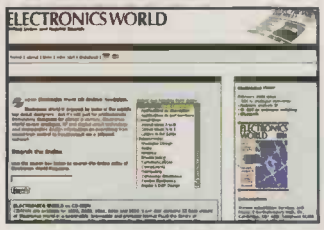

As a PC data base or hard copy, SoftCopy can supply a complete index of Electronics World articles over the past ten years. Photo copies of articles from back issues are also available.

TECHNICAL AND SCIENTIFIC SUPPLIES
www.technicalscientific.com

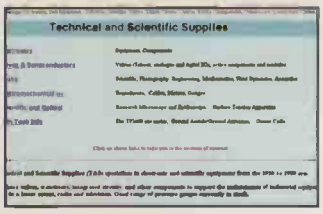

Suppliers of pre-1985 equipment and components.
- Test/Measurement equipment
- Valves and semiconductors
- Transducers and pressure gauges
- Scientific books and catalogues
- Manuals and data sheets

TELEVES
www.televes.com

Televes website was launched as an easier way to keep in contact with our World-wide Network of Subsidiaries and Clients. This site is constantly updated with useful information/news plus you can download info on our range: TV Aerials & accessories, Domestic and Distribution amplifiers, Systems Equipment for DTT and Analogue TV, Meters and much more.
Tel: 44(0) 1633 875821
email hbotas@televes.com

TEST EQUIPMENT SOLUTIONS
www.TestEquipmentHQ.com

Test Equipment for rental or second user sale at the industry's lowest prices. All types of equipment from all leading manufacturers including general purpose, communications and industrial test. Items fully refurbished with 1 year warranty. Rental rebate given on purchases.

TELONIC
www.telonic.co.uk

Telonic specialists in laboratory AC & DC Power Supplies, Electronic AC & DC Loads, Electrical Safety Testing and complete test systems. Plus RF Filters, Attenuators, Diesel Engine Smoke Measurement, Quartz Crystal Microbalances.
Tel +44 (0) 118 9786911

TELNET
www.telnet.uk.com

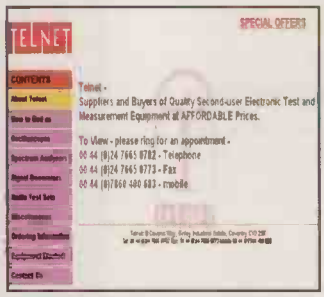

Top quality second-user Test and Measurement Equipment
eMail sales@telnet.uk.com

Total Robots
www.totalrobots.co.uk

Robot Kits and Control Technology products, including OOPic the first Object-Oriented Programmable Integrated Circuit. Secure on-line ordering and fast delivery.

ULTRA-CREA OY
www.ultra-crea.fi

Our business idea is to provide our customers complete service, i.e. design from the customer specification to the delivery of finished and tested products.
Our offerings are as follows:
- RF transmission line filters from 100MHz to 3GHz
- Special antennas to frequencies as above
- Transmitter and Receiver modules
- RF-subunits such as amplifiers, oscillators, directional couplers etc.

VUTRAX PCB DESIGN SOFTWARE
www.vutrax.co.uk

Vutrax electronic schematic and pcb design system for Windows 95/98, ME, NT, 2000, XP and Linux. Limited capacity FREE version downloads available, all upgradeable to various customised level.

WILMSLOW AUDIO
www.wilmslow-audio.co.uk

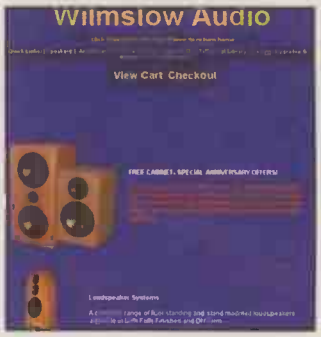

"Uk's largest supplier of high quality loudspeaker kits and drive units. Comprehensive range of components and accessories, including damping products, connectors and grilles materials. Demonstration facilities available.

ELECTRONICS WORLD

On CD-ROM

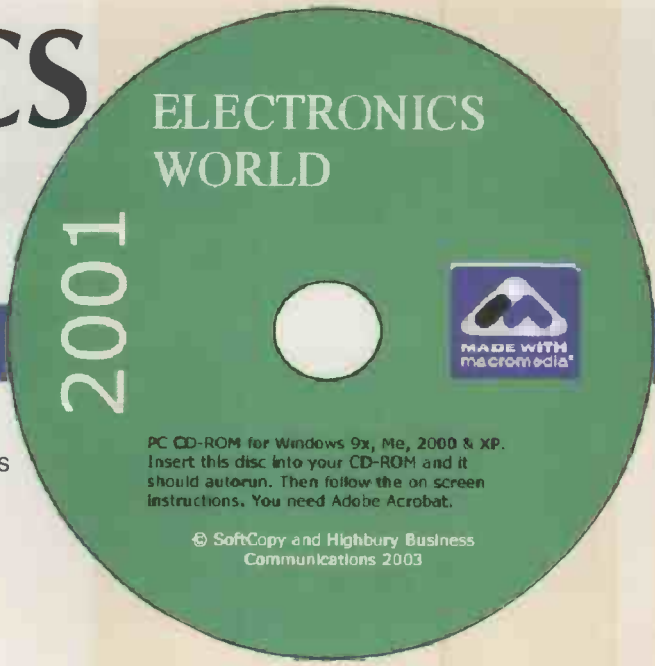

Electronics World is enjoyed by some of the world's top circuit designers - but it's not just for professionals. Stimulating designers for almost a century. *Electronics World* covers analogue, RF and digital circuit technology and incorporates design information on everything from model train control to input/output via a 10baseT network.. and it's now available all on CD-ROM.

- 12 issues on each CD-ROM
- Full text and diagrams of all articles, circuit ideas, letters etc
- Easy to browse
- Fully searchable by keywords and index
- High-quality print in colour
- Full software listings included
- easy to use

1999, 2000, 2001, 2002, and 2003

CDROMS are available for 1999, 2000, 2001, 2002 and 2003. Each disk contains 12 back issues of Electronics World in a searchable, browsable and printable format PLUS the library of software files. The CDROMS run on PCs with Windows '9x, Me, 2000 and XP. requires IE4 or above and Adobe Acrobat Reader (supplied on the CD).
The CDROMs are only £30 each including VAT and UK post, add £1 extra postage for Europe, £5 extra postage for rest of the world, exclusively available from SoftCopy Limited, address below.

Limited special offer for readers of Electronics World - all five CDs for the price of four.

Please send the following CD-ROMS

_____qty 1999
_____qty 2000
_____qty 2001
_____qty 2002
_____qty 2003

NAME _____
Address _____
_____
_____
Card Number _____ Expiry _____

Order now at:

www.ewmag.co.uk

SoftCopy Limited, 1 Vineries Close, Cheltenham GL53 0NU, UK
Tel: +44 (0) 1242 241455 Fax: +44 (0) 1242 241468 sales@softcopy.co.uk

A QUANTUM LEAP IN EMBEDDED CONTROLLERS

QuickFIRE

SUPERCONTROLLERS

Our range provides:-

- The fastest 68000 based Core up to 66 Mhz.
- Extensive I/O:- Serial, IrDA, SPI, I²C, Analogue, Timers/Counters, RTC, etc.
- Large Memory Capacity:- Flash, SRAM, DRAM.
- Supports:- Mono & Colour LCD's, Touch Panels & Keypads, Very Low Power.

ALSO LOW COST

DEVELOPMENT

- Target easily & quickly.
- Full ANSI 'C' compiler, assembler & linker all Windows32 based.
- Source Level Debug.
- Full Driver Support with Libraries.
- Real Time Multitasking OS with a free run time licence.
- Free Unlimited email support.

www.cms.uk.com

see our web site for full details

CAMBRIDGE MICROPROCESSOR SYSTEMS LTD

Unit 17-18 Zone 'D' Chelmsford Rd. Ind. Est.
Great Dunmow, Essex CM6 1XG

Telephone: 01371 875644

email: sales@cms.uk.com

FRUSTRATED!

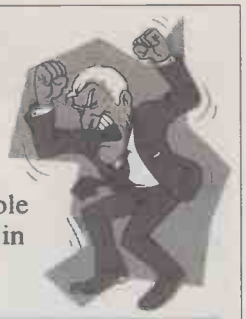

Looking for ICs TRANSISTORS?

A phone call to us could get a result. We offer an extensive range and with a World-wide database at our fingertips, we are able to source even more. We specialise in devices with the following prefix (to name but a few).

2N 2SA 2SB 2SC 2SD 2P 2SJ 2SK 3N 3SK 4N 6N 17 40 AD ADC AN AM AY BA BC BD BDT BDV BDW BDX BF BFR BFS BFT BFW BFX BFY BLY BLX BS BR BRX BRY BS BSS BSV BSW BSX BT BTA BTB BRW BU BUK BUT BUV BUW BUX BUY BUZ CA CD DX CXA DAC DG DM DS DTA DTC GL GM HA HCF HD HEF ICL ICM IRF J KA KIA L LA LB LC LD LF LM M M5M MA MAB MAX MB MC MDA J MJE MJF MM MN MPS MPSA MPSH MPSU MRF NJM NE OM OP PA PAL PIC PN RC S SAA SAB SAD SAJ SAS SDA SG SI SL SN SO STA STK STR STRD STRM STRS SV1 T TA TAA TAG TBA TC TCA TDA TDB TEA TIC TIP TIPL TEA TL TLC TMP TMS TPU U UA UAA UC UDN ULN UM UPA UPC UPD VN X XR Z ZN ZTX + many others

Please ask for our Free CD Rom STOCK LIST.
WE STOCK A MASSIVE RANGE OF COMPONENTS!

Mail, phone, Fax, Credit Card orders & callers welcome.

Cricklewood Electronics Ltd
40-42 Cricklewood Broadway, London NW2 3ET
Tel: 020 8452 0161 Fax: 020 8208 1441
www.cricklewoodelectronics.co.uk
E-mail: sales@cricklewoodelectronics.com

ADVERTISERS INDEX

BETA LAYOUT 33
BK ELECTRONICS 33
CMS 63
CRICKLEWOOD 63
EW KOMPASS ..... IBC
JOHNS RADIO 30
JPG 30
LABCENTER 2
OLSON 9
QUASAR 19
STEWART OF READING 36
TELNET ..... IFC, OBC
WESTDEV 30
WILMSLOW 33
XL SYSTEMS 33

Service Link

ARTICLES WANTED

BEST CASH PRICES PAID

FOR VALVES KT88, PX4 AND MOST AUDIO/OTHER TYPES.

Tel: 01403 784961

Billington Export Ltd.
Sussex RH14 9EZ
Fax: 01403 783519
Email: sales@bel-tubes.co.uk
Visitors by appointment

TOP PRICES PAID

For all your valves, tubes, semi conductors and ICs.

Langrex Supplies Limited

1 Mayo Road, Croydon, Surrey CR0 2QP
TEL: 020 8684 1166 FAX: 020 8684 3056

WANTED

VALVES AND VALVE BASES

Valve associated components including high voltage capacitors, electrolytics etc. Must be over 250v working, OLD 1 watt and ½ watt resistors (Carbon). Obsolete semiconductors.

CBS
157 Dickson Road, Blackpool FY1 2EU
Tel: 01253 751858. Fax: 01253 302979

FOR SALE

PRINTED CIRCUIT BOARDS

DESIGNED & MANUFACTURED

agar Circuits

- *Prototype or production quantities*
- *Fast turnround available*
- *PCBs designed from circuit diagrams*
- *Almost all computer files accepted*
- *PCB assembly - mechanical assembly*
- *Full product design-manufacture-test-repair*

Unit 5, East Belfast Enterprise Park
308 Albertbridge Rd, Belfast BT5 4GX
TEL 028 9073 8897 FAX 028 9073 1802
info@agarcircuits.com

SERVICES

POWER SUPPLY DESIGN

Switched Mode PSU
Power Factor Correction
designed to your specification

Tel/Fax: 01243 842520
e-mail: eugen_kus@cix.co.uk

Lomond Electronic Services

WESTDALE ELECTRONICS

We would welcome the opportunity of quoting for your requirements.

If you have a problem with your semiconductors or relays, give us a call and we will locate them for you.

We also have access to inventory Stateside ie
Current, Obsolete, Mil, Spec

Call: Bryan on - Tel/Fax: 0115 9402127

SERVICES

From **Concept** To **Production**

48 HOUR SERVICE

Electronic design and manufacturing services for the new millennium:

- Embedded monitoring & control
- PSTN telephones and test equipment
- Datacom interfacing, line driving etc.
- Switch Mode & linear PSU and battery management
- Gas detection systems
- Printed Circuit Board design
- Technical documentation, schematic layout & language translation
- Wireless telemetry systems
- Audio & Video processing
- GSM telemetry via SMS or data (TCP/IP)
- DVD player control systems
- GPS positioning systems
- Specialist cable looms
- Small, medium & large scale manufacturing

Email: sales@designersystems.co.uk
Tel/Fax: +44 (0) 1872 223306

for more information see our web site @ **http://www.designersystems.co.uk**

MICROCHIP Consultant Program Member

Member since 1998

Designer Systems.co.uk — Design & manufacturing in the UK

PCBs Conv/PTH/Multi-Layer/Flexible • UK & Far East production
• CAD Layout • Electronic Design • Assembly (prototype & production)
• SMD m/c assy @ 18,500 cps/hr

Deliveries from 24 Hrs

Prototype PTH PCBs from just £40.00

Approvals: ISO 9002/UL

SEE OUR WEB SITES

Tel: 01635 40347
Newbury Electronics Ltd
Faraday Road Newbury Berks RG14 2AD
Fax: 01635 36143
e-mail: circuits@newbury.tcom.co.uk
http://www.newburyelectronics.co.uk

Visit **www.pcbtrain.com**
The low cost source for prototype PCBs from 1 to 6 layers

WANTED

WANTED Surplus or Obsolete Electronic Components

Turn your excess stock into instant cash!

SEND OR FAX YOUR LIST IN STRICTEST CONFIDENCE

Will collect anywhere in the UK

Mushroom COMPONENTS

28 College Street, Kempston, Bedfordshire, MK42 8LU
Tel: 01234 363611 Fax: 01234 326611
E-mail: sales@mushroom.co.uk
Internet: www.mushroom.co.uk

For a FREE consultation on how best to market your products/services to a professional audience ring SCOTT on 01322 611292

Service Link

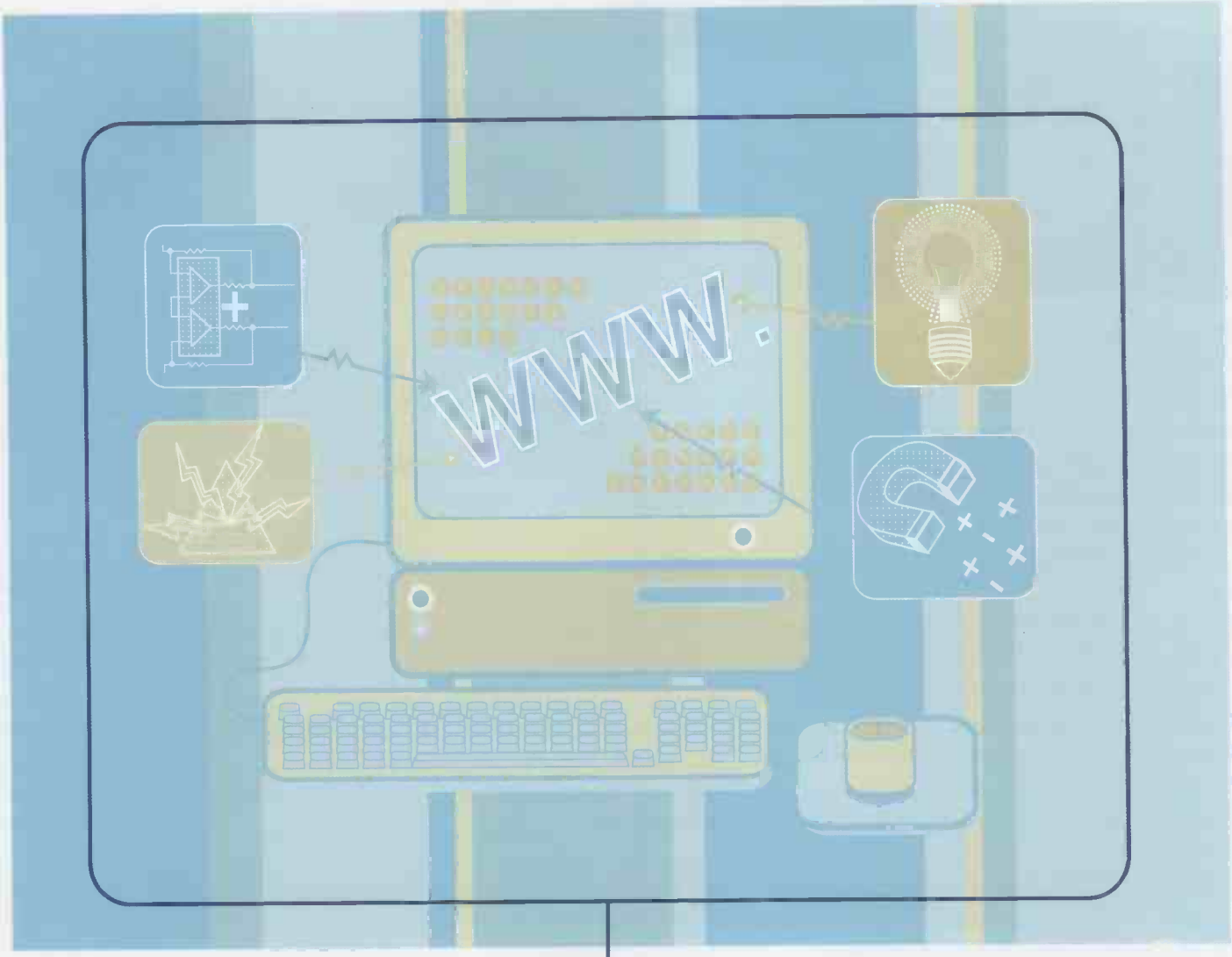

A click in the right direction

- 23,000 companies
- 21,000 products and services

Call us on 01342 332121

- Any media you choose
- No registration hassle
- FREE to use

ElectronicsWeekly Buyers' Guide
Windsor Court, East Grinstead House
East Grinstead, Sussex RH19 1XA

ElectronicsWeekly
BUYERS' GUIDE
www.ewbuyersguide.com

Reed Business Information

Telnet

Special Sale of Quality Second-User Test Equipment

TELNET

Amitsu – MP1552A/B various options ATM/PDH/SDH Analyser	From £1400
Amitsu – MP1560A opt 01/02/03 STM Analyser	£2700
Amitsu – MP1656A opt 02 Portable STM-16 Analyser 1310/1550mm	£4000
Amitsu – MP1570A- SDH/PDH/ATM Tester various	From £2700
Amitsu – MI9001A Optical Power Meter (Various sensors available)	£650
Amitsu – MN939A/MN939C/MN9605A/MN9610A Optic. Attens.	From £750
Amitsu – ME520A Digital Transmission Test Set	£500
Amitsu – ME520B Digital Transmission Test Set	£2000
Amitsu – MP1520B Digital Transmission Analyser	£1500
Amitsu – ME3520A SDH/SONET Analyser (Tx and Rx)	£6000
Amitsu – ME3620A SDH/SONET Analyser (Tx and Rx)	£7500
Amitsu – MD6430A Network Data Analyser	£9995
Amitsu – Emiscan EMCT Test Solution (Consists: MS2601B/ANT1/4401/MA8611)	£3500
Agilent – J2300E Advisor WAN Protocol Analyser	£5250
Agilent – 8753D (Opt 006) Network Analyser – Colour – 6GHz	£12000
Agilent – 54810A Infinium 500MHz – 2 channel	£3000
Agilent – 54610B 500MHz – 2 channel	£1250
Agilent – 3325B Synthesised Function Gen. (21 MHz)	£2000
Agilent – 3326A (opt 001) Synth. Function Gen. (13MHz)	£1500
Agilent – 35665A Dual Channel Dynamic Signal Analyser	£4000
Agilent – 71500A – 40GHz Microwave Transition Analyser (Inc 70004A/70820A)	£8000
Agilent – 37717C – Various options available – phone for details	from £1000
Agilent – 37718B – Comms. Perf. An. opts 1, 12, 106, 601, 602	£9750
Agilent – 8153A Lightwave Multimeter (less I/P Module) Modules available separately	£650
Agilent – 8163A Lightweight Multimeter	£500
Agilent – 8156A Dig. Optical Attenuator – various options	from £750
Agilent – 8164A Lightwave Measurement Mainframe	£2250
Agilent – 86120C Optical Wavelength Meter	from £1500
Agilent – 83480A Sampling Oscilloscope Mainframe (plus ins avail)	£2950
Burster – 1424 IEEE High Precision Decade Resistor	£1250
IFR 2031 2.7 GHz Signal Generator (opt 05)	£3500
IFR 2850 Digital Transmission Analyser	£900
IFR 2853 Digital Transmission Analyser (opts 14, 15, 25)	£1475
Tektronix CSA 8000 Comms. Sig. An. (ring for plug-ins available)	from £11000
Tektronix CSA 803C Communications Signal Analyser Mainframe	£3500
Tektronix MTS 100 MPEG Test System	£3000

Lots more equipment available.
Please call for availability and prices.

Tel: 024 7665 0702
Fax: 024 7665 0773
Email: sales@telnet.uk.com

Carriage and VAT added to all goods.
See Inside Front Cover for address.